DECEMBER 6, 1999 (P= 14.30, Bo = 0.30, Lo = 350.54)

KITT PEAK MAGNETOGRAM

Bright = +
Dark = -

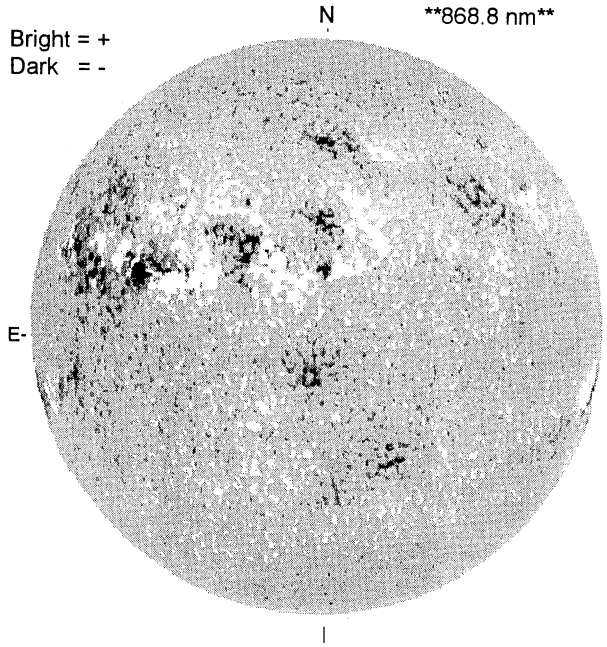

1607 UT

STANFORD MAGNETOGRAM

Solid = +
Dashed = -

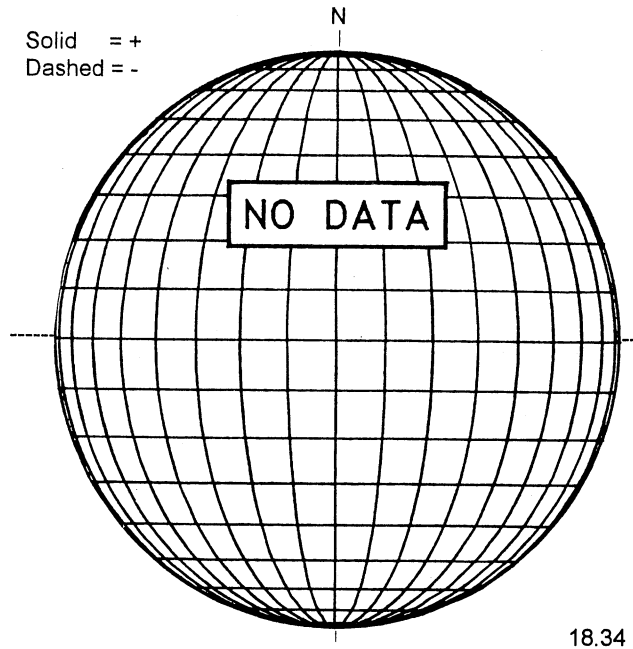

18.34 -
19.31 UT

MT. WILSON MAGNETOGRAM

DeltaY = 13.1
DeltaX = 9.6

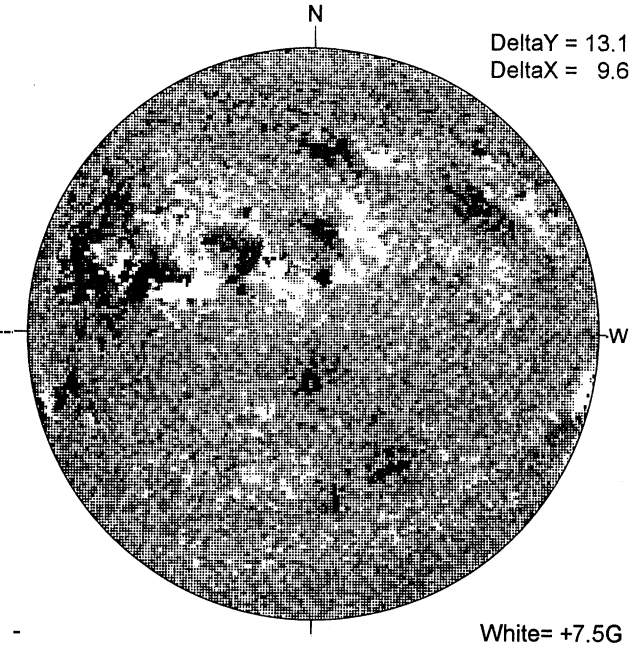

White= +7.5G
Black = -7.5G

MEUDON H-ALPHA

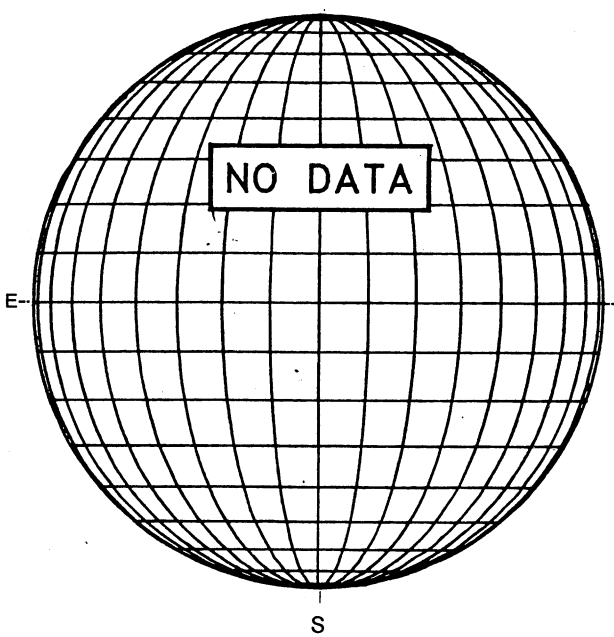

RAMEY SUNSPOT

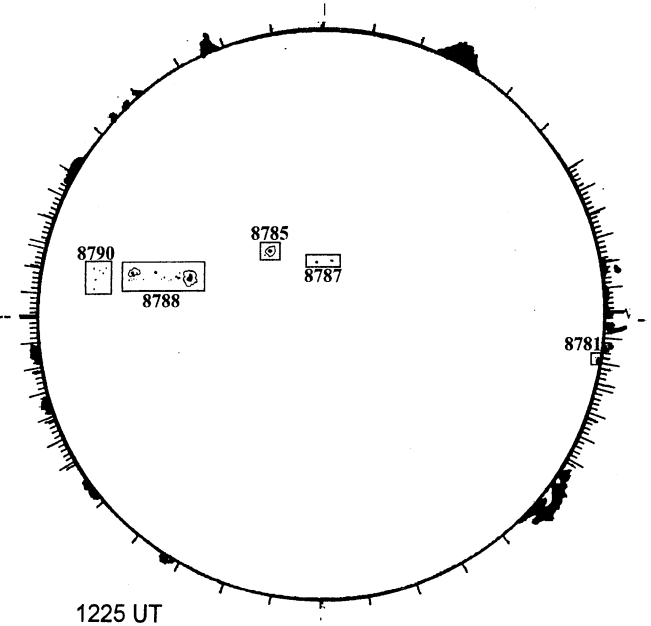

1225 UT
1007 UT LOMN Prom
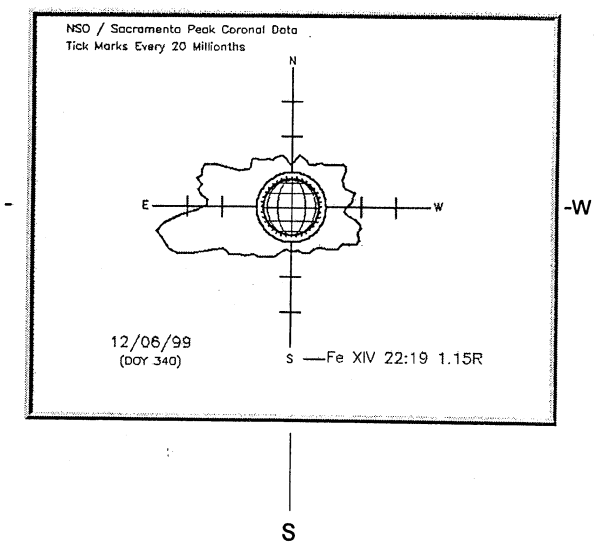
SACRAMENTO PEAK CORONA (1.15 Radii)----