NOVEMBER 29, 1999 (P= 17.04, Bo = 1.19, Lo = 82.79)

KITT PEAK MAGNETOGRAM

N **868.8 nm**

Bright = +
Dark = -

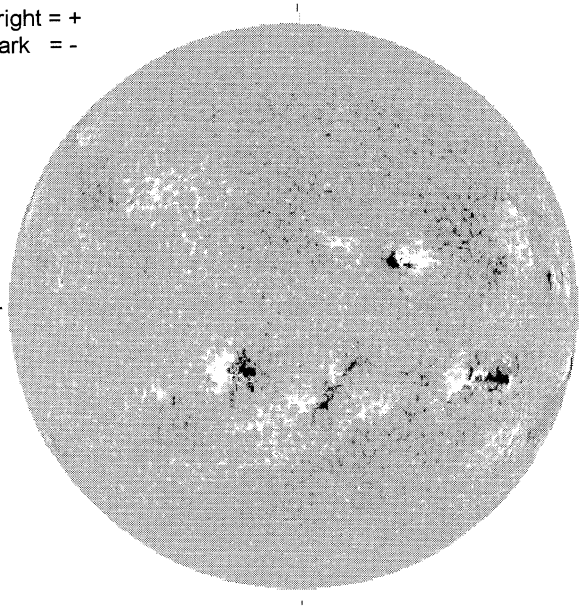

E-

1623 UT

STANFORD MAGNETOGRAM

N

Solid = +
Dashed = -

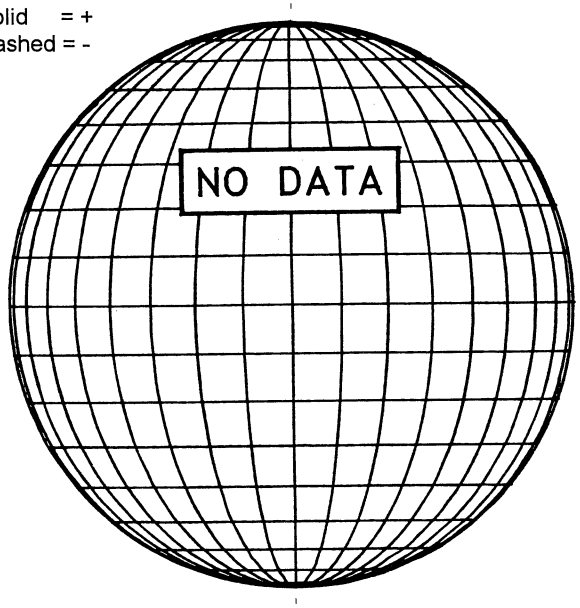

MT. WILSON MAGNETOGRAM

N

DeltaY = 13.1
DeltaX = 9.6

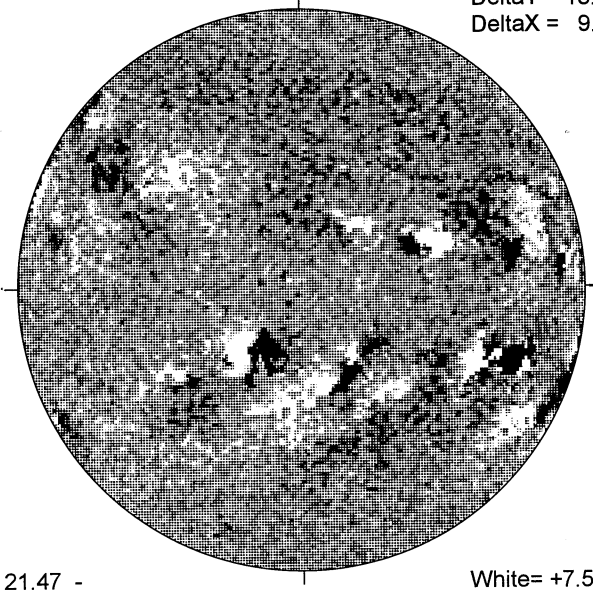

-W

21.47 -
22.44 UT

White= +7.5G
Black = -7.5G

MEUDON H-ALPHA

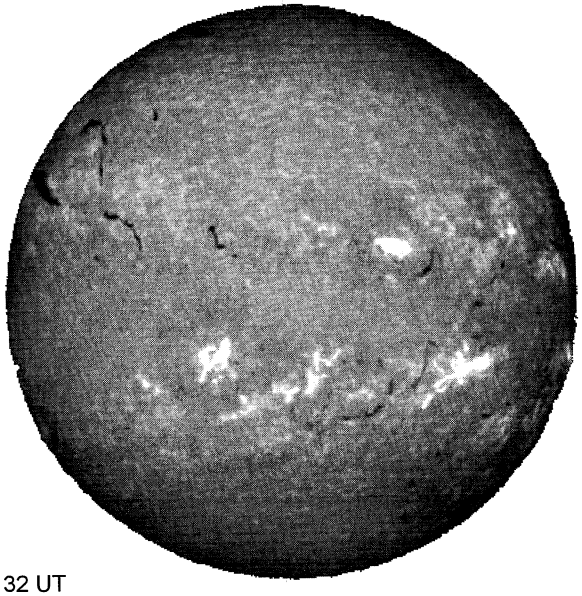

E--

1132 UT

S

RAMEY SUNSPOT

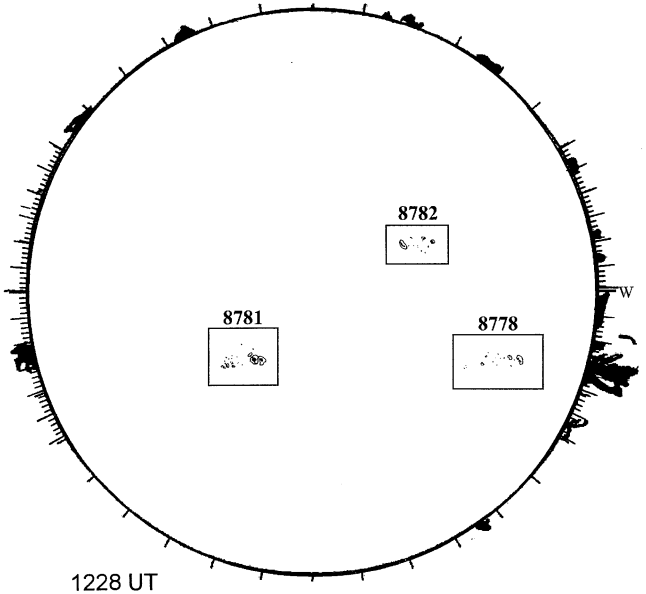

W

1228 UT
0849 UT LOMN Prom S

SACRAMENTO PEAK CORONA (1.15 Radii)

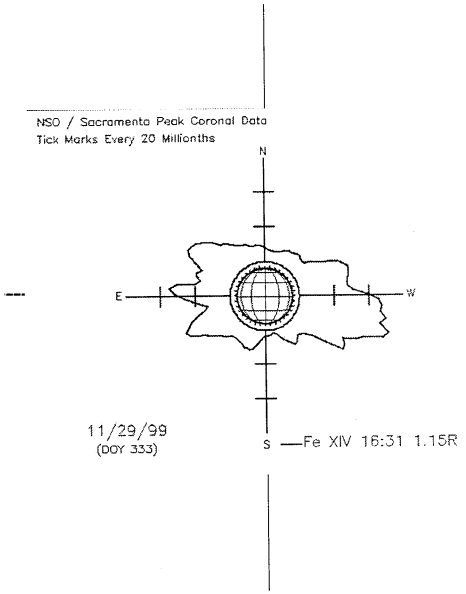

--------W

S