# NOVEMBER 21, 1999 ( P= 19.78, Bo = 2.18, Lo = 188.24)

## KITT PEAK MAGNETOGRAM

**868.8 nm**

Bright = +
Dark = -

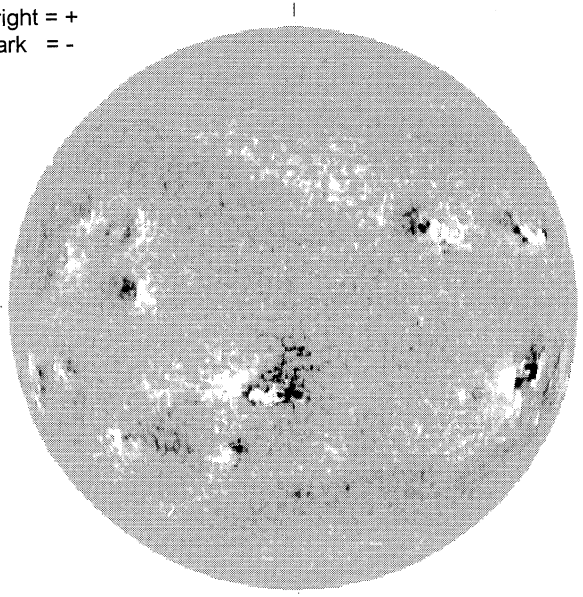


1613 UT

## STANFORD MAGNETOGRAM

Solid = +
Dashed = -

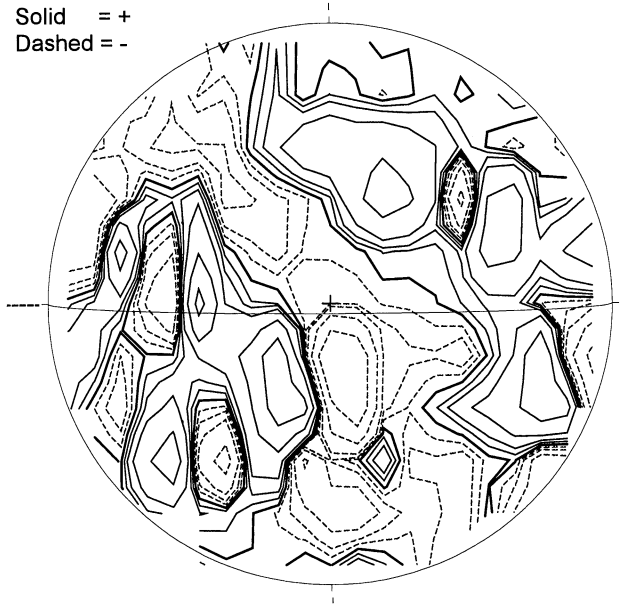


2114 UT

## MT. WILSON MAGNETOGRAM

DeltaY = 13.1
DeltaX = 9.6

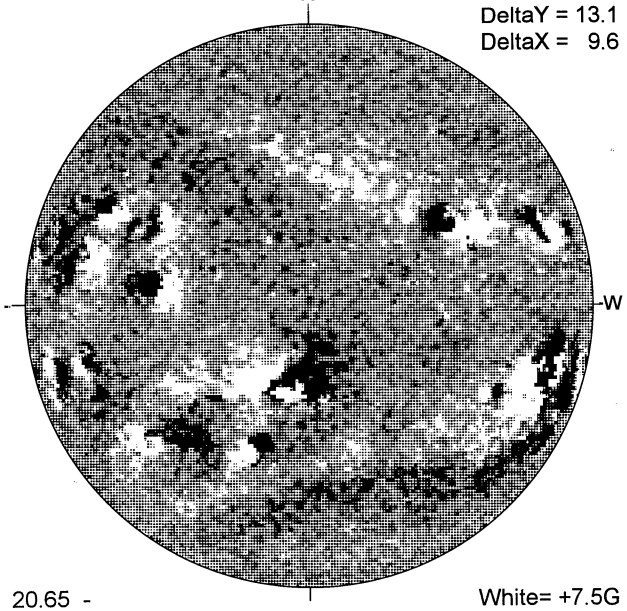


20.65 -
21.62 UT

White= +7.5G
Black = -7.5G

## MEUDON H-ALPHA

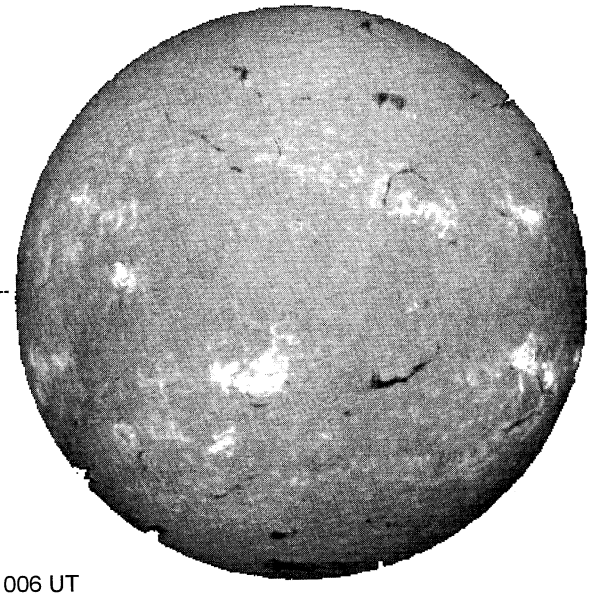


1006 UT

## RAMEY SUNSPOT

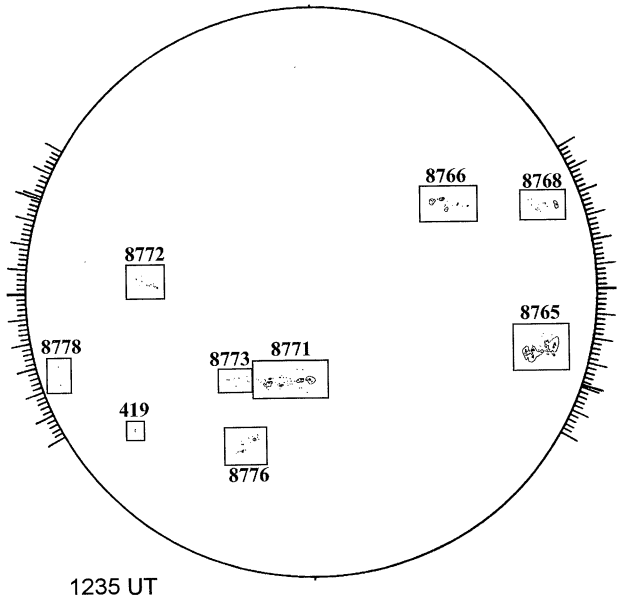


1235 UT
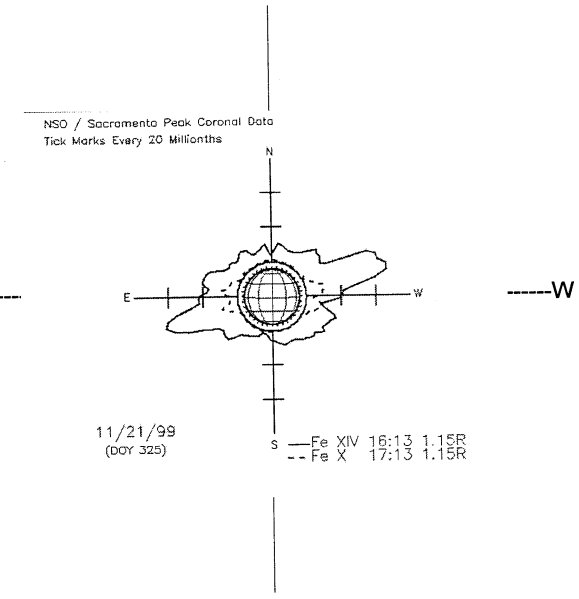
## SACRAMENTO PEAK CORONA (1.15 Radii)----