NOVEMBER 16, 1999 (P= 21.27, Bo = 2.78, Lo = 254.15)

KITT PEAK MAGNETOGRAM

N **868.8 nm**

Bright = +
Dark = -

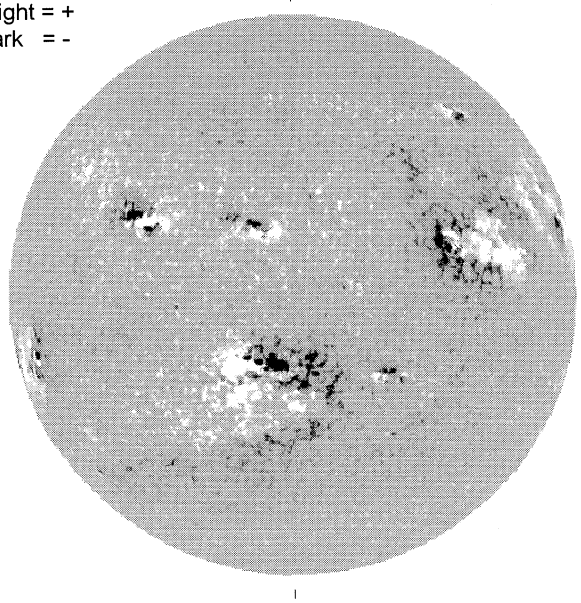

E

1614 UT

STANFORD MAGNETOGRAM

N

Solid = +
Dashed = -

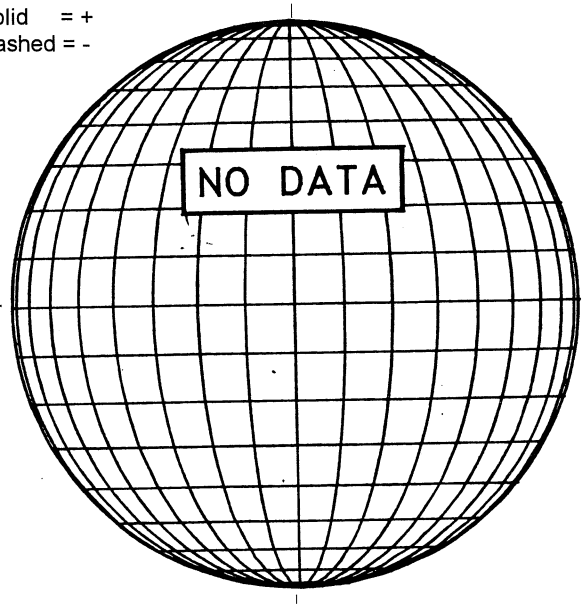

MT. WILSON MAGNETOGRAM

N

DeltaY =
DeltaX =

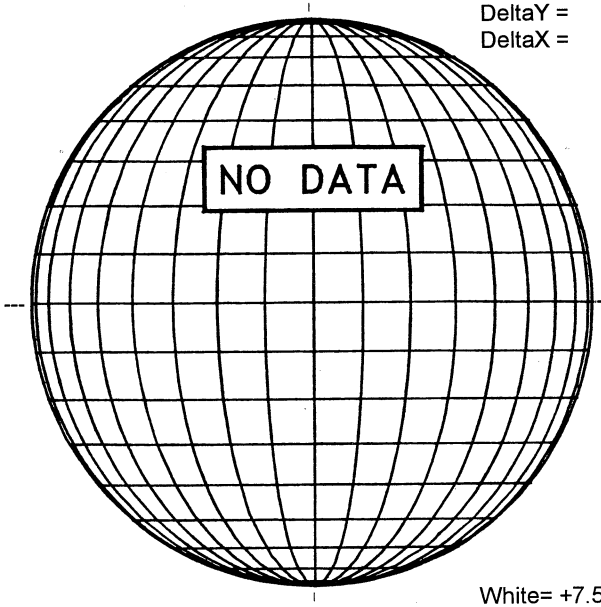

W

White= +7.5G
Black = -7.5G

MEUDON H-ALPHA

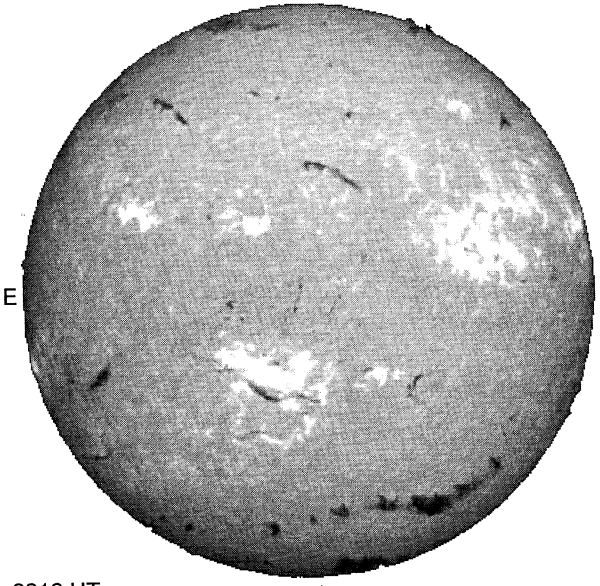

E

0816 UT

S

HOLLOMAN SUNSPOT

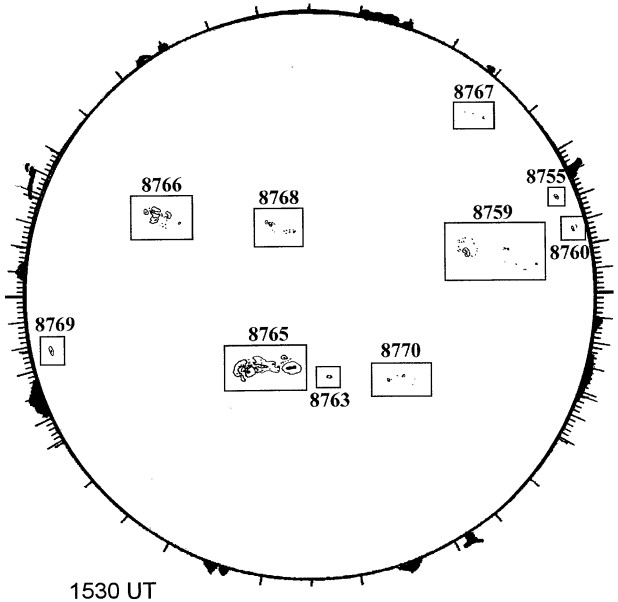

1530 UT
0709 UT LOMN Prom S

SACRAMENTO PEAK CORONA (1.15 Radii)----

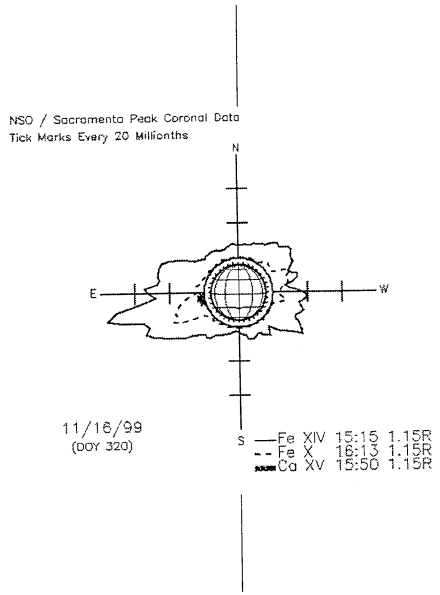

-----W

S