NOVEMBER 15, 1999 (P= 21.54, Bo = 2.90, Lo = 267.33)

KITT PEAK MAGNETOGRAM

N **868.8 nm**

Bright = +
Dark = -

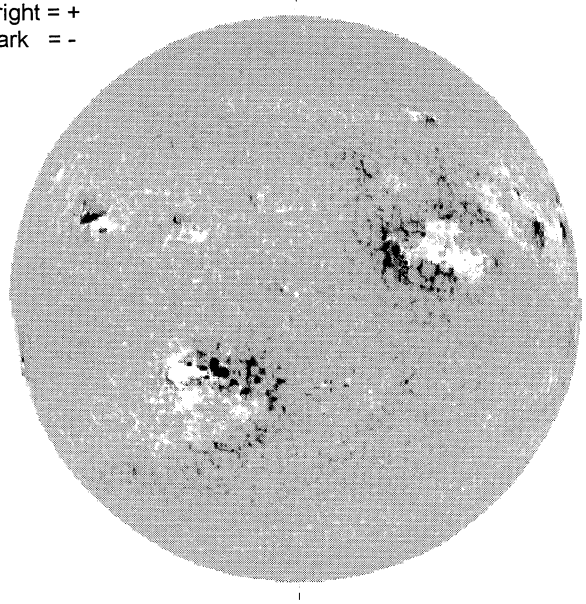

E

1623 UT

STANFORD MAGNETOGRAM

N

Solid = +
Dashed = -

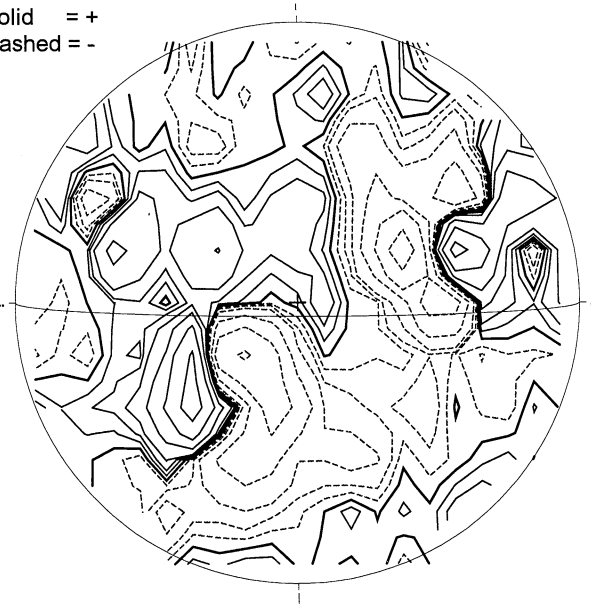

2102 UT

MT. WILSON MAGNETOGRAM

N

DeltaY = 13.1
DeltaX = 9.6

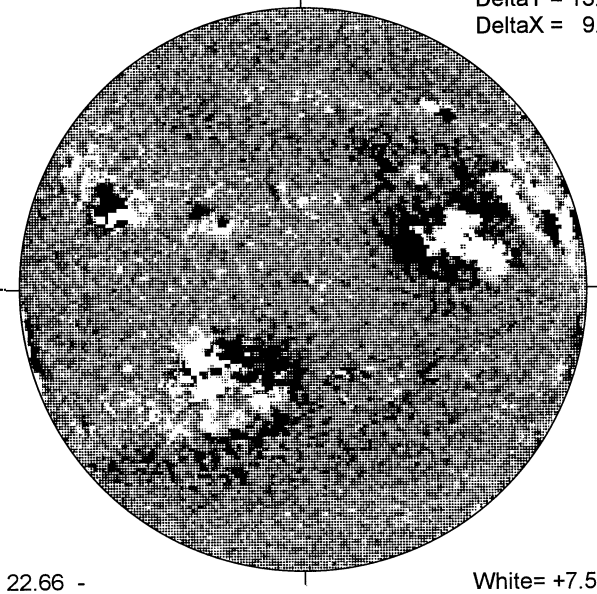

W

22.66 -
23.63 UT

White= +7.5G
Black = -7.5G

MEUDON H-ALPHA

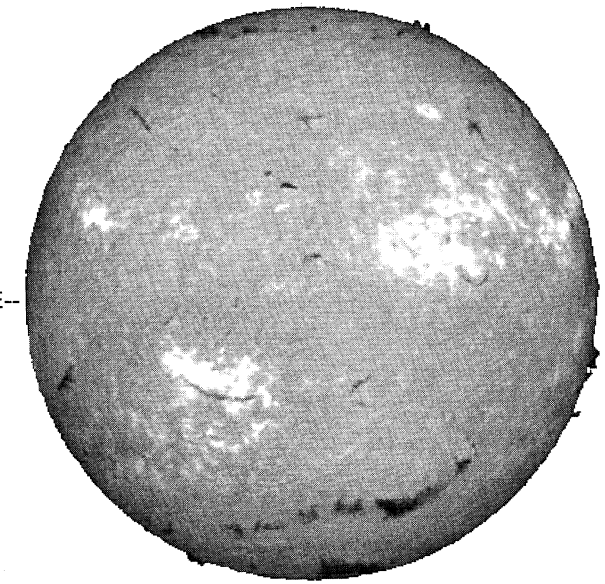

E

0906 UT

S

HOLLOMAN SUNSPOT

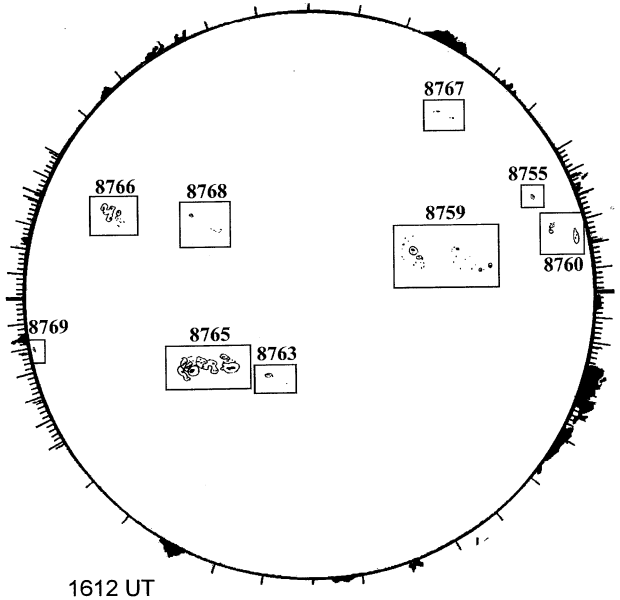

1612 UT
1312 UT LOMN Prom S

SACRAMENTO PEAK CORONA (1.15 Radii)

NSO / Sacramento Peak Coronal Data
Tick Marks Every 20 Millionths

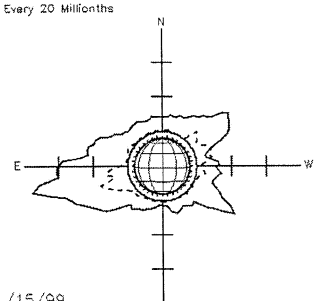

W

11/15/99
(DOY 319)

Fe XIV 15:27 1.15R
Fe X 16:23 1.15R
Ca XV 16:2 1.15R
No Ca XV Activity Today

S