NOVEMBER 11, 1999 (P= 22.57, Bo = 3.36, Lo = 320.06)

KITT PEAK MAGNETOGRAM

N

868.8 nm

Bright = +
Dark = -

E--

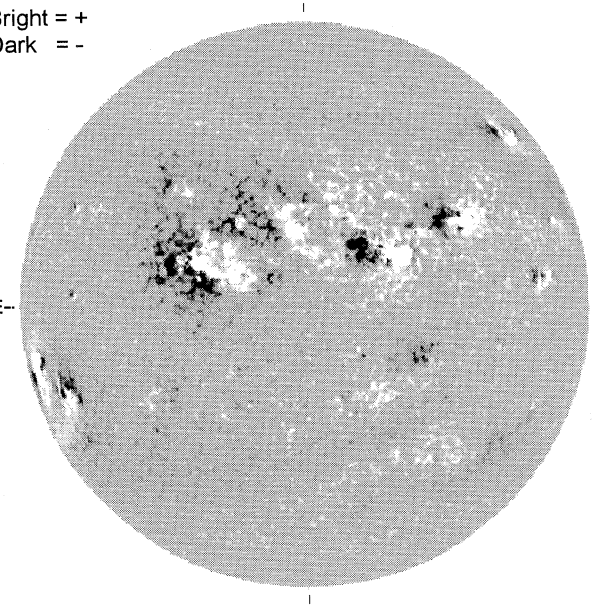

1812 UT

STANFORD MAGNETOGRAM

N

Solid = +
Dashed = -

2312 UT

MT. WILSON MAGNETOGRAM

N

DeltaY = 13.1
DeltaX = 9.6

-W

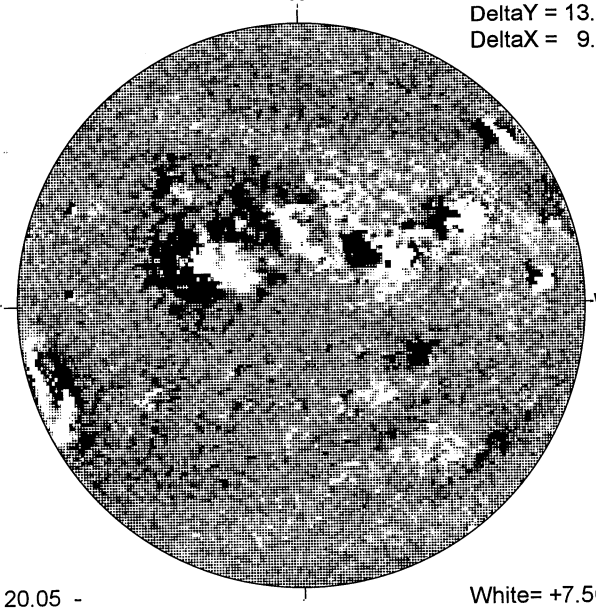

20.05 -
21.01 UT

White= +7.5G
Black = -7.5G

MEUDON H-ALPHA

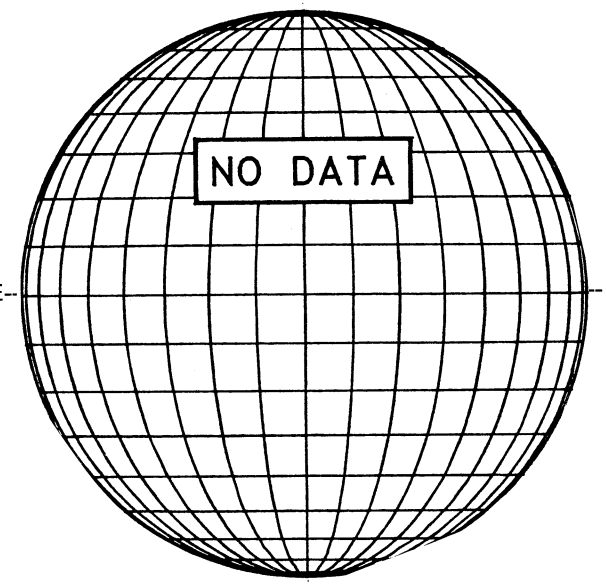

E--

S

HOLLOMAN SUNSPOT

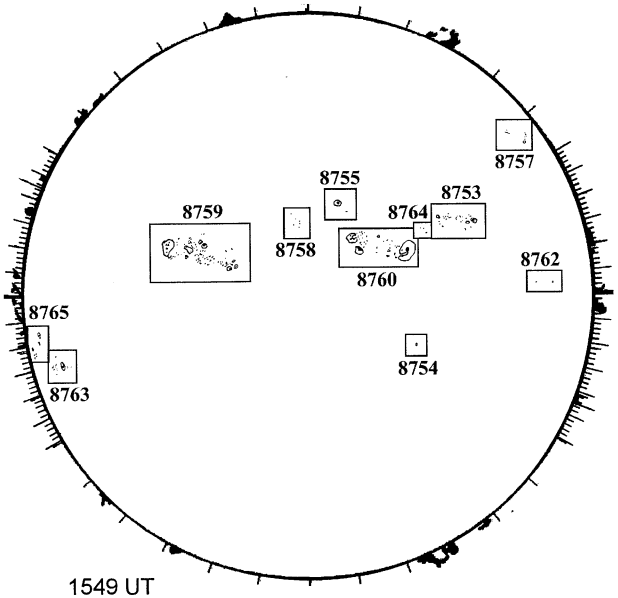

1549 UT
0935 UT LOMN Prom S

SACRAMENTO PEAK CORONA (1.15 Radii)----

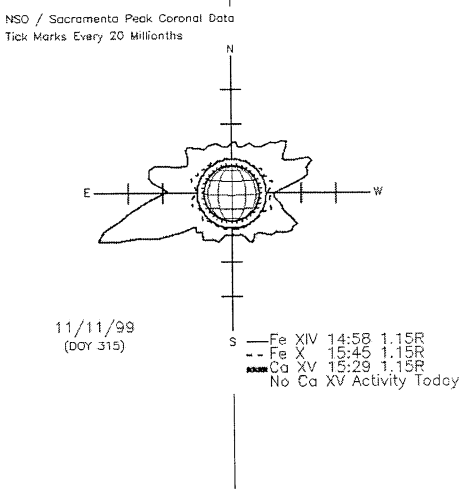

------W

S