**NOVEMBER 10, 1999 ( P= 22.80, Bo = 3.47, Lo = 333.25)**

KITT PEAK MAGNETOGRAM

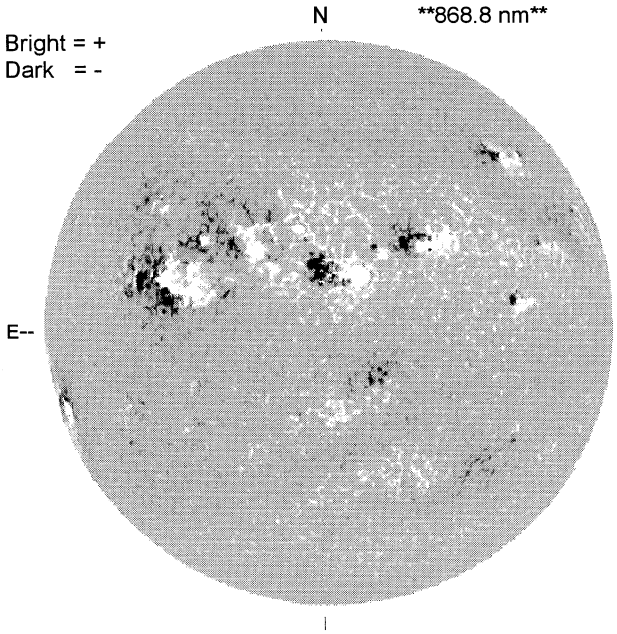


STANFORD MAGNETOGRAM

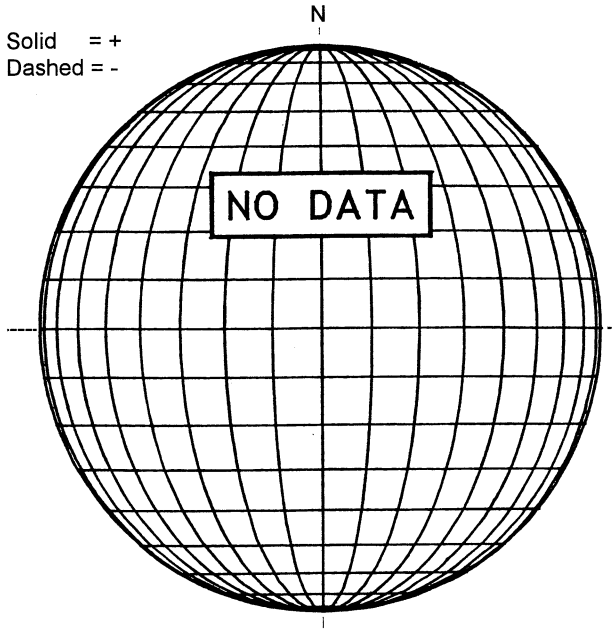


MT. WILSON MAGNETOGRAM

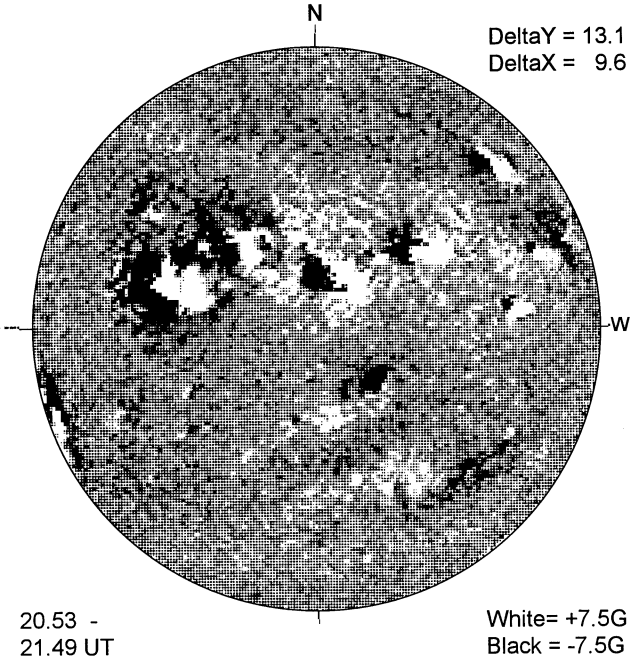


MEUDON H-ALPHA

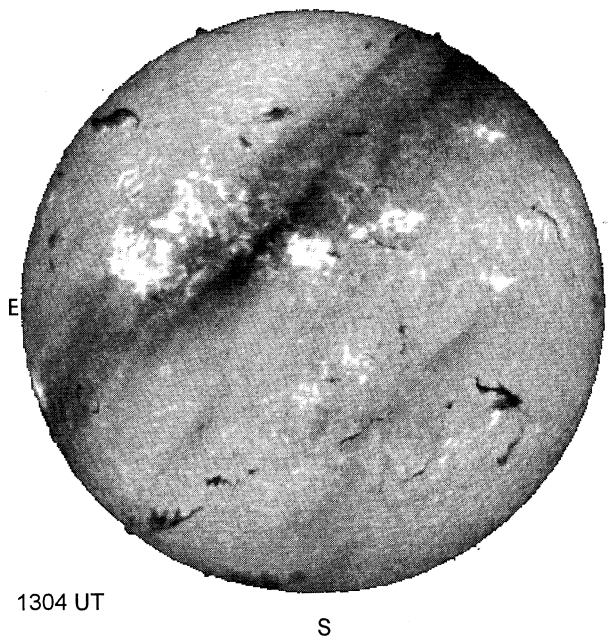


HOLLOMAN SUNSPOT

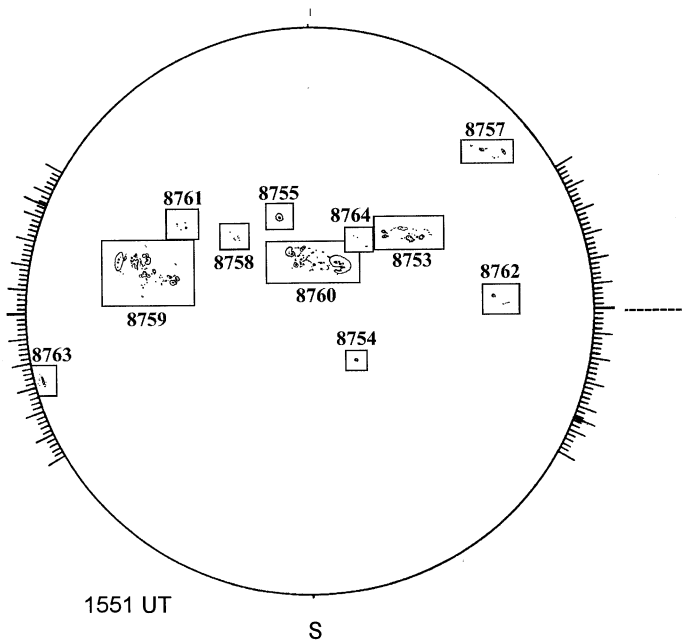

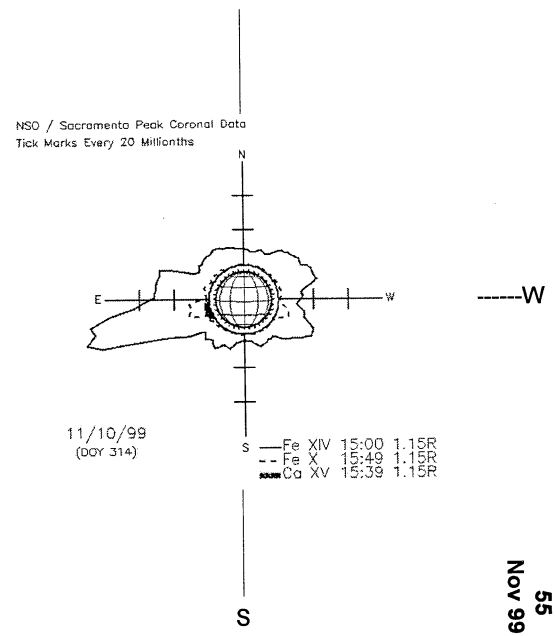
SACRAMENTO PEAK CORONA (1.15 Radii)----