NOVEMBER 8, 1999 (P= 23.25, Bo = 3.69, Lo = 359.61)

KITT PEAK MAGNETOGRAM

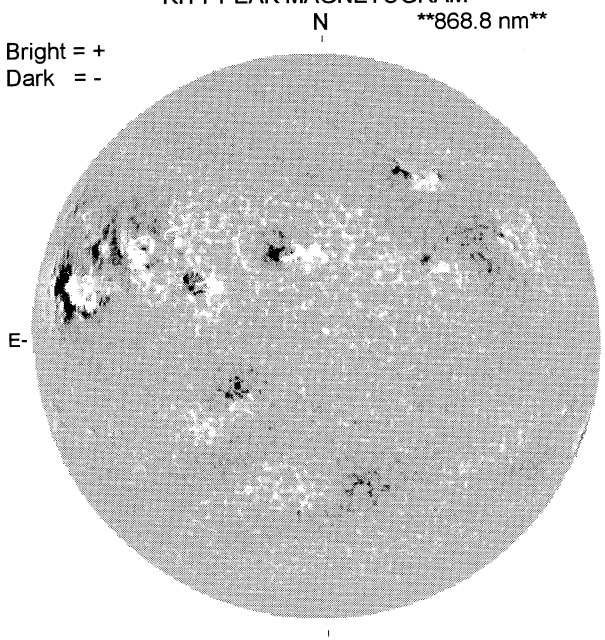

1643 UT

STANFORD MAGNETOGRAM

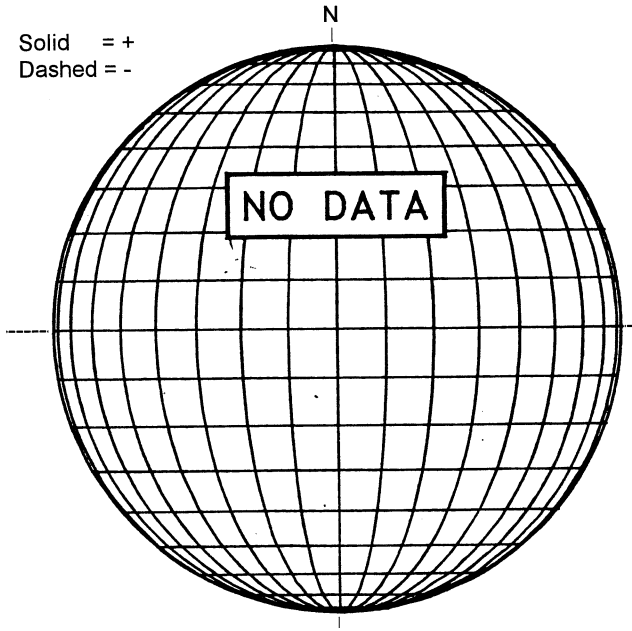

MT. WILSON MAGNETOGRAM

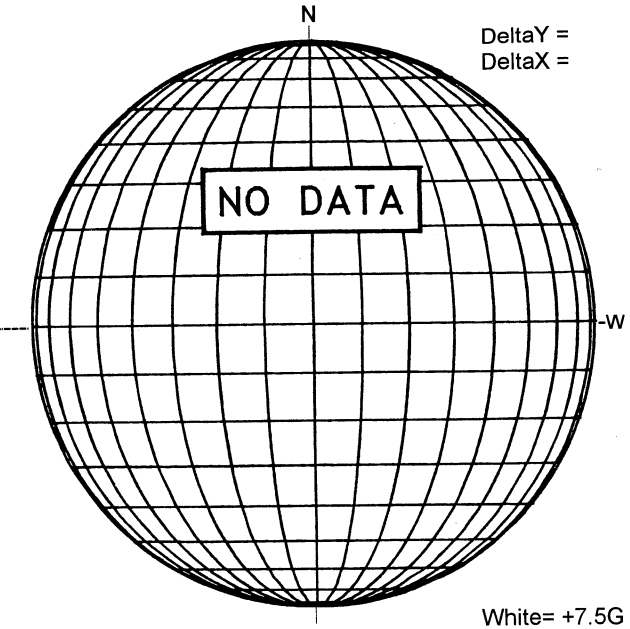

White= +7.5G
Black = -7.5G

MEUDON H-ALPHA

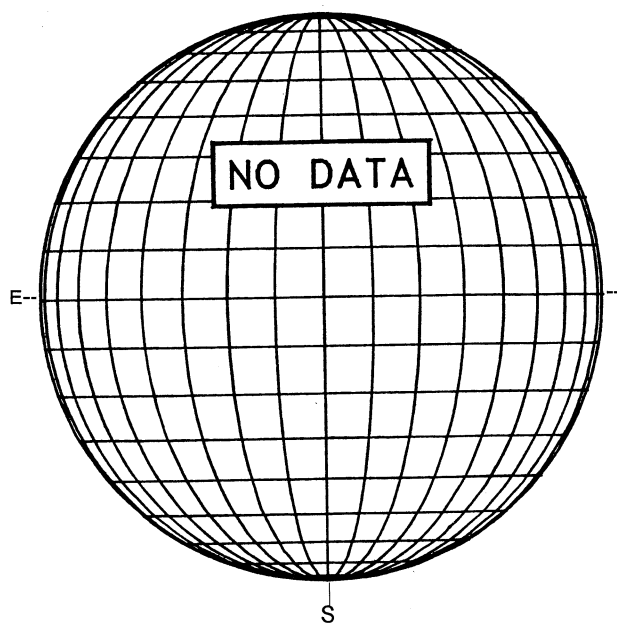

RAMEY SUNSPOT

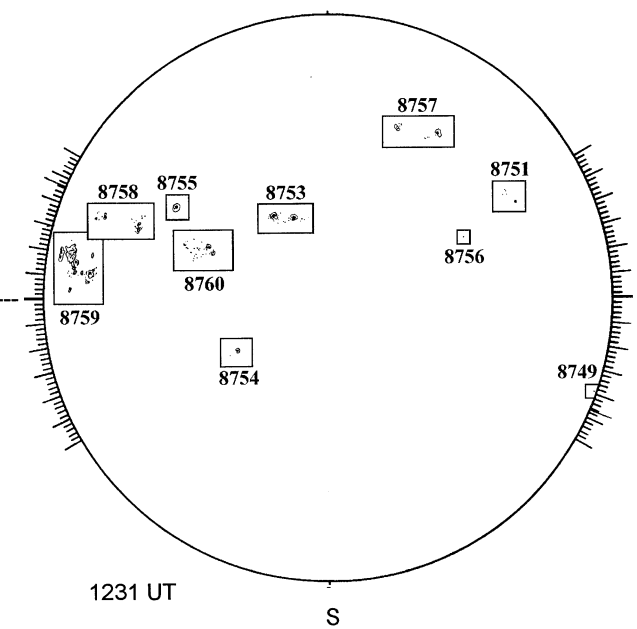

1231 UT
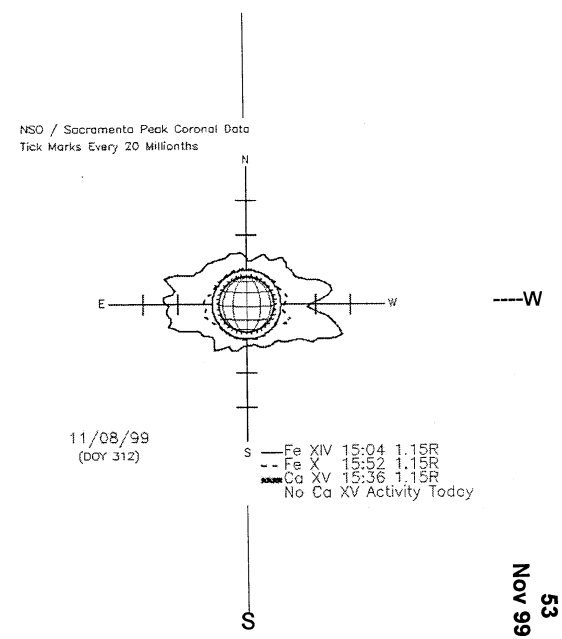
SACRAMENTO PEAK CORONA (1.15 Radii)----