NOVEMBER 5, 1999 (P= 23.87, Bo = 4.01, Lo = 39.17)

KITT PEAK MAGNETOGRAM

868.8 nm

Bright = +
Dark = -

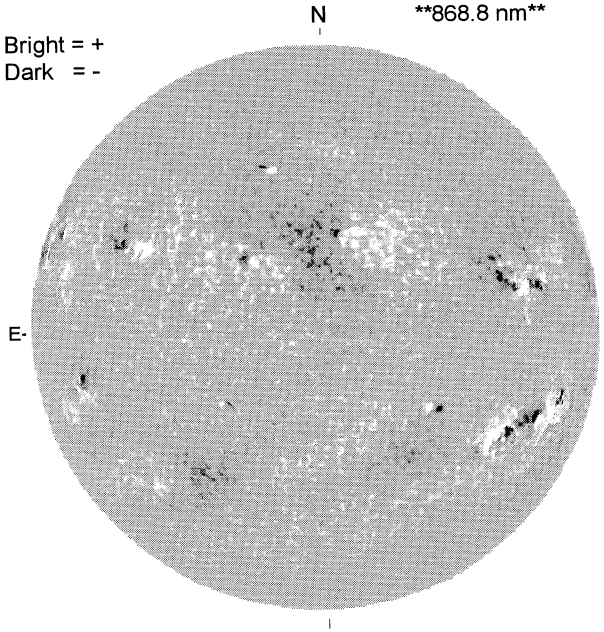

1748 UT

STANFORD MAGNETOGRAM

Solid = +
Dashed = -

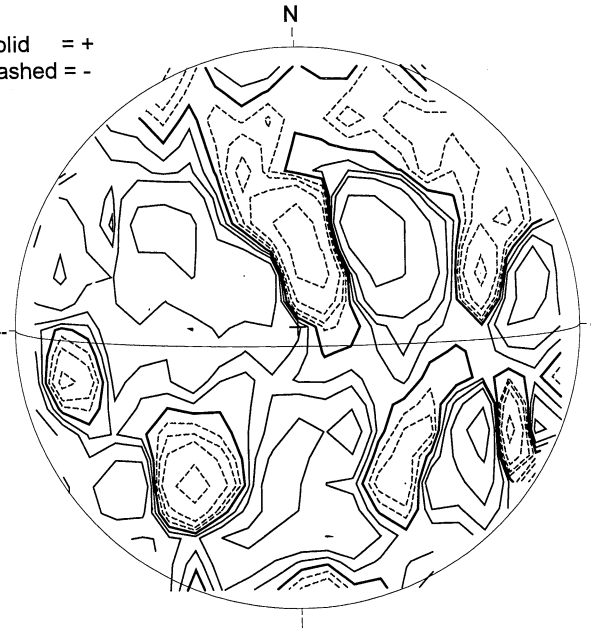

2119 UT

MT. WILSON MAGNETOGRAM

DeltaY = 13.1
DeltaX = 9.6

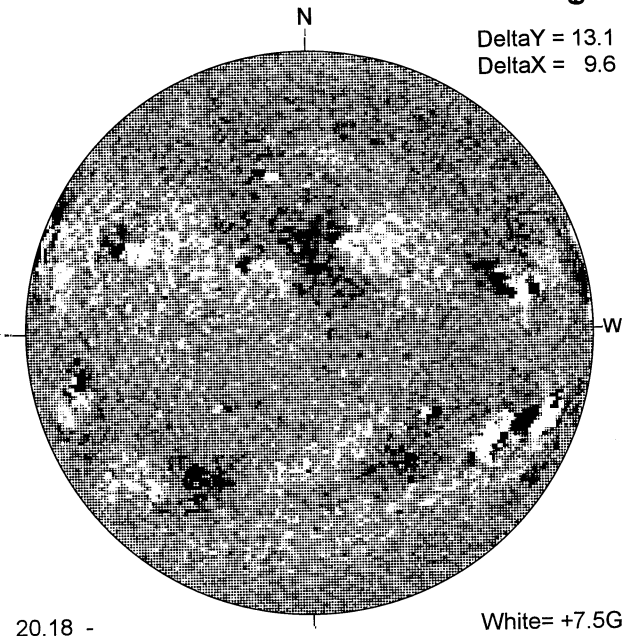

20.18 -
21.14 UT

White= +7.5G
Black = -7.5G

MEUDON H-ALPHA

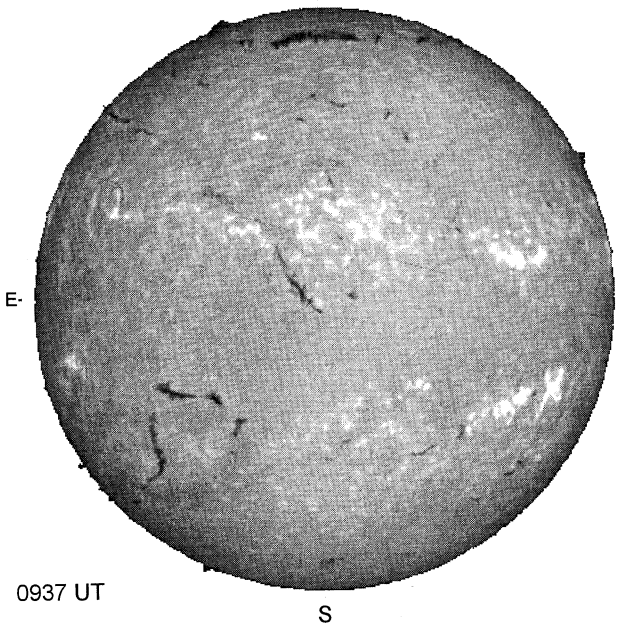

0937 UT

RAMEY SUNSPOT

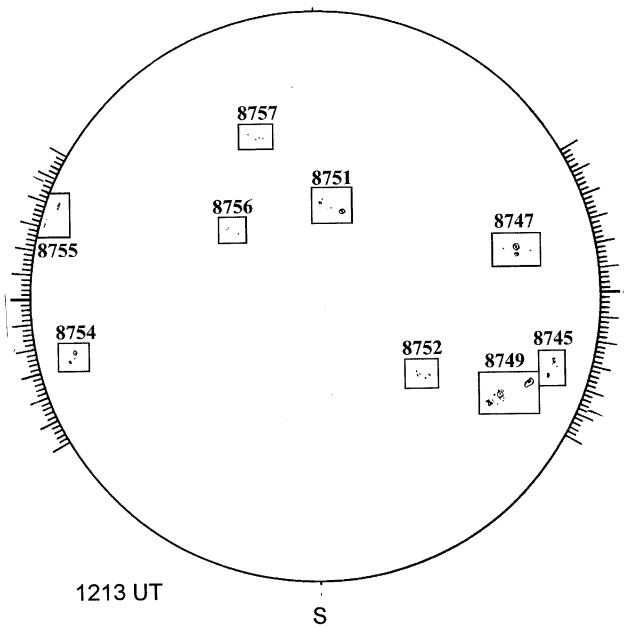

1213 UT
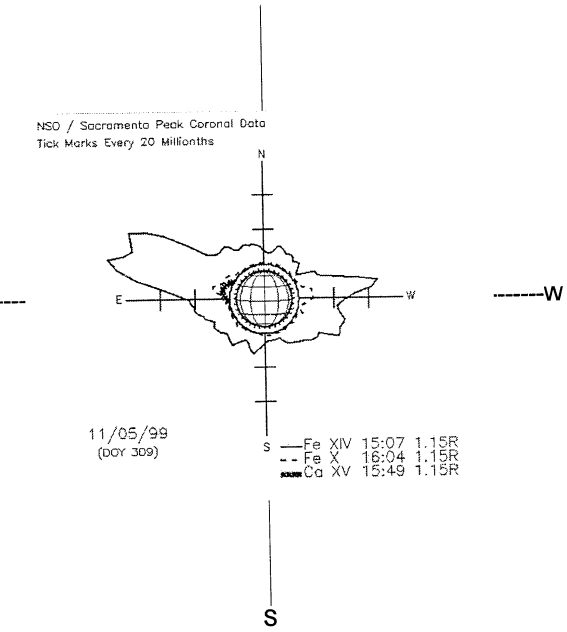
SACRAMENTO PEAK CORONA (1.15 Radii)