NOVEMBER 4, 1999 (P= 24.06, Bo = 4.12, Lo = 52.35)

KITT PEAK MAGNETOGRAM

N

868.8 nm

Bright = +
Dark = -

E--

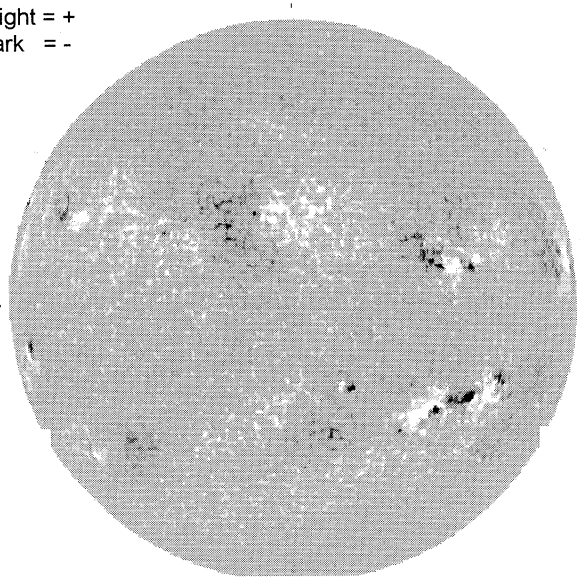

1731 UT

STANFORD MAGNETOGRAM

N

Solid = +
Dashed = -

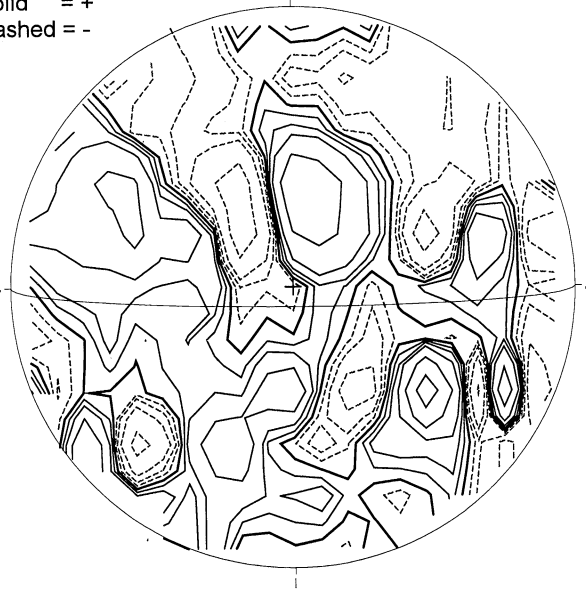

2237 UT

MT. WILSON MAGNETOGRAM

N

DeltaY = 13.1
DeltaX = 9.6

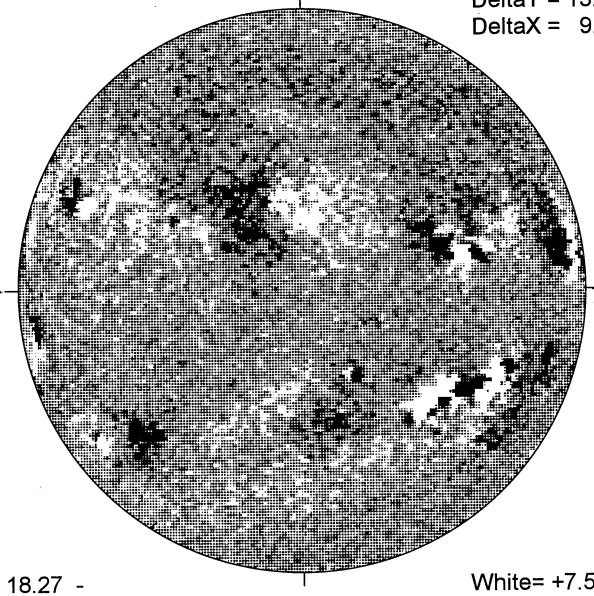

-W

18.27 -
19.23 UT

White= +7.5G
Black = -7.5G

MEUDON H-ALPHA

E-

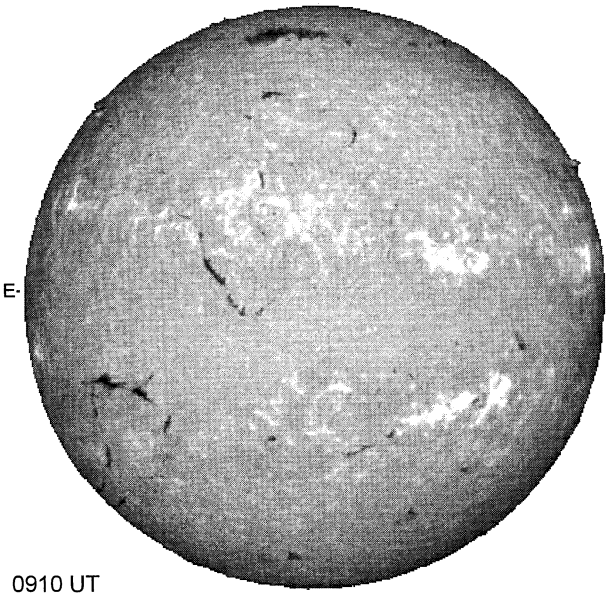

0910 UT

S

RAMEY SUNSPOT

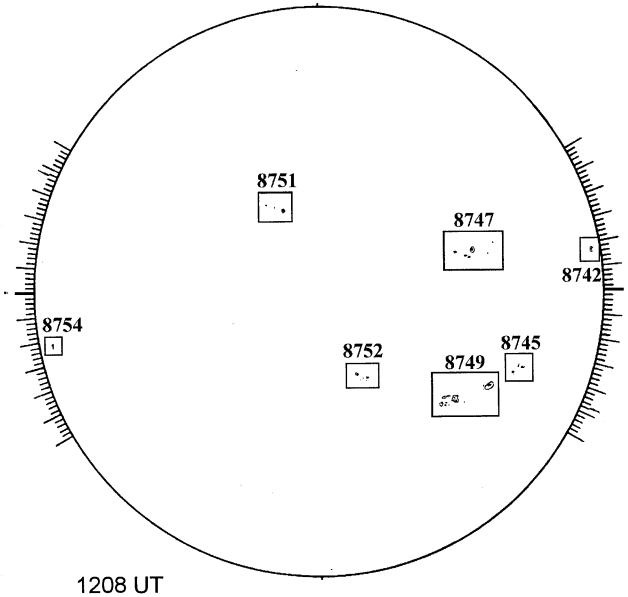

1208 UT

S

SACRAMENTO PEAK CORONA (1.15 Radii)----

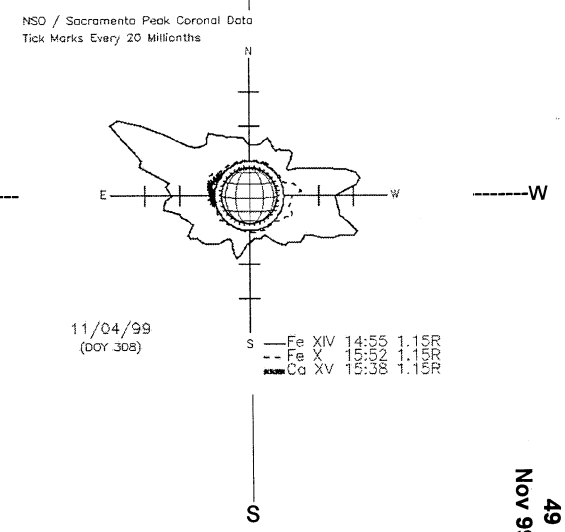

-------W

S