OCTOBER 14, 2006 (P= 26.24, Bo = 5.96, Lo = 60.01)

KITT PEAK MAGNETOGRAM--SOLIS

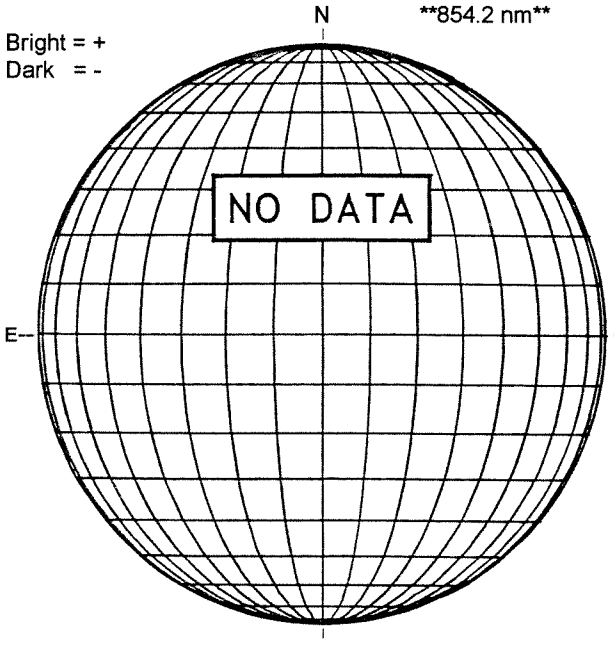

STANFORD MAGNETOGRAM

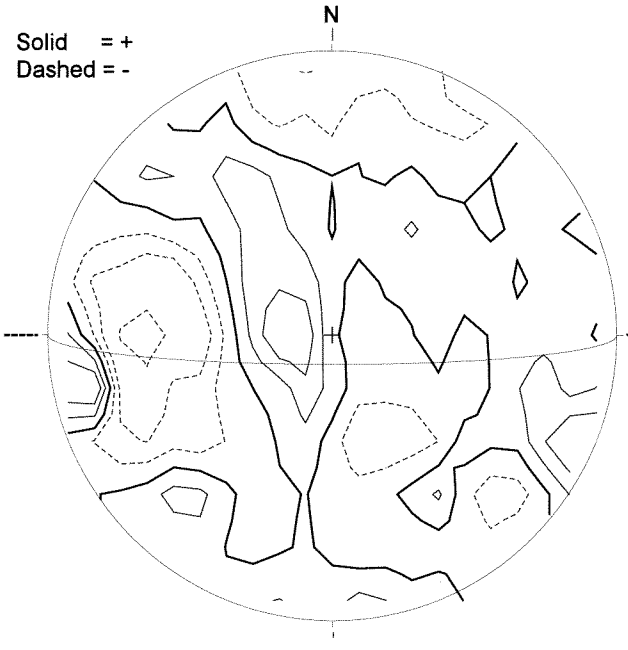

MT. WILSON MAGNETOGRAM

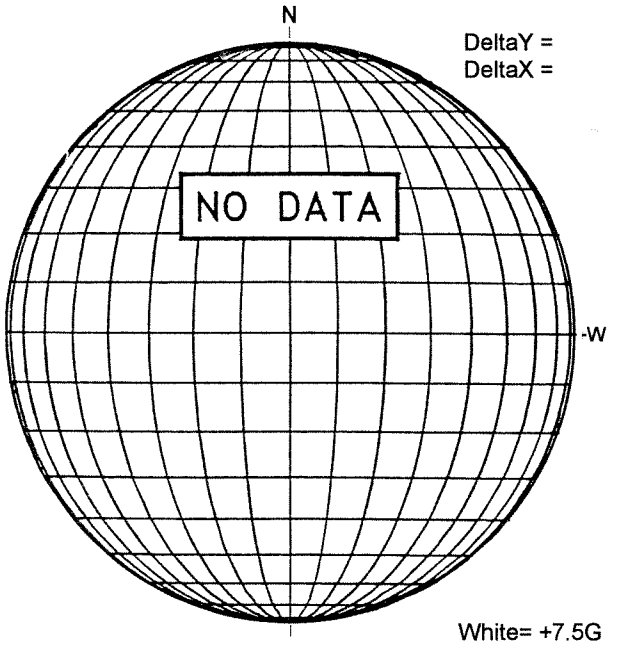

KANZELHOHE H-ALPHA

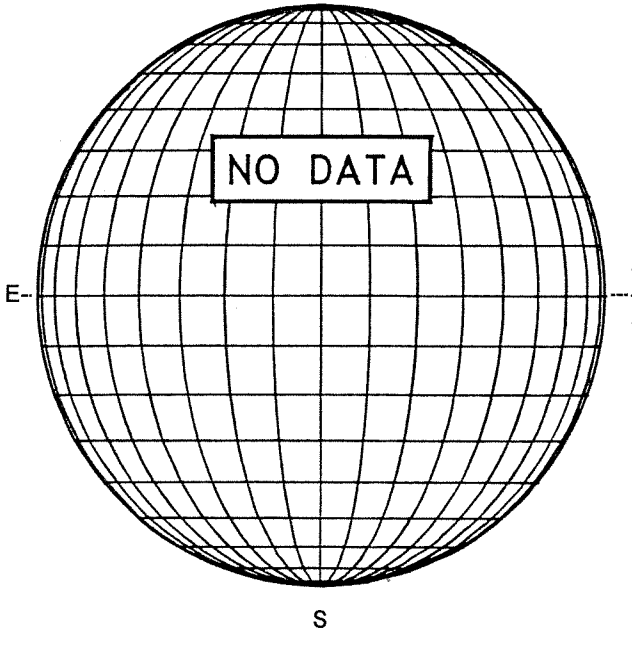

LEARMONTH SUNSPOTS

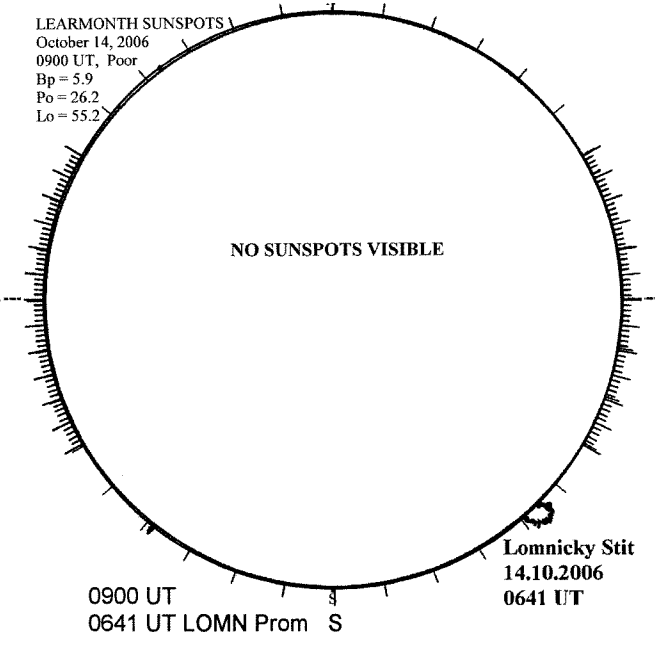
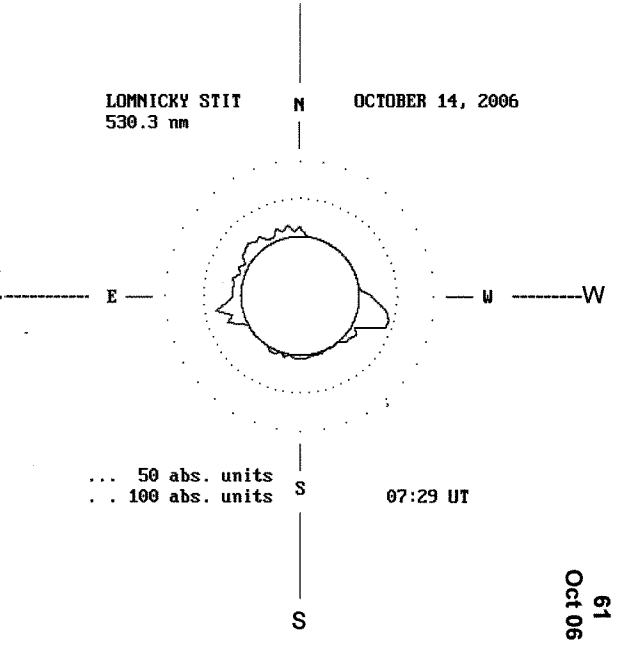
LOMNICKY PEAK CORONA (1.04 Radii)----