MAY 30, 2006 (P= -16.23, Bo = -0.93, Lo = 71.09)

KITT PEAK MAGNETOGRAM—SOLIS

Bright = +
Dark = -

N

854.2 nm

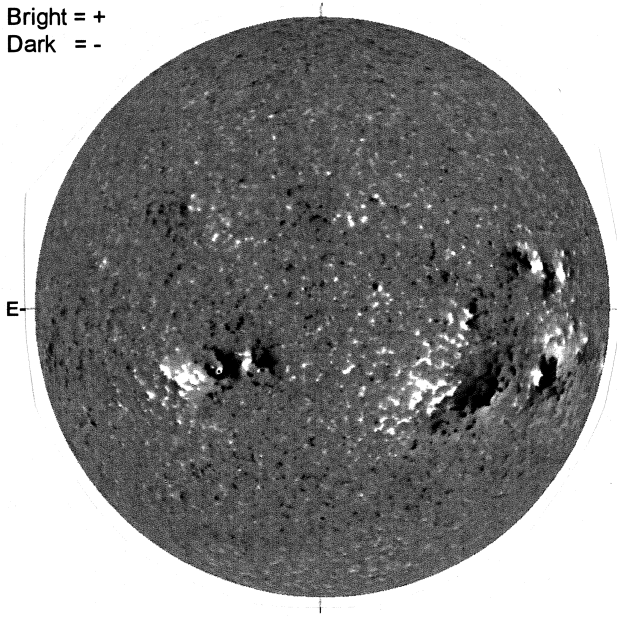

E

1735 UT

STANFORD MAGNETOGRAM

Solid = +
Dashed = -

N

2309 UT

MT. WILSON MAGNETOGRAM

N

DeltaY = 13.1
DeltaX = 9.6

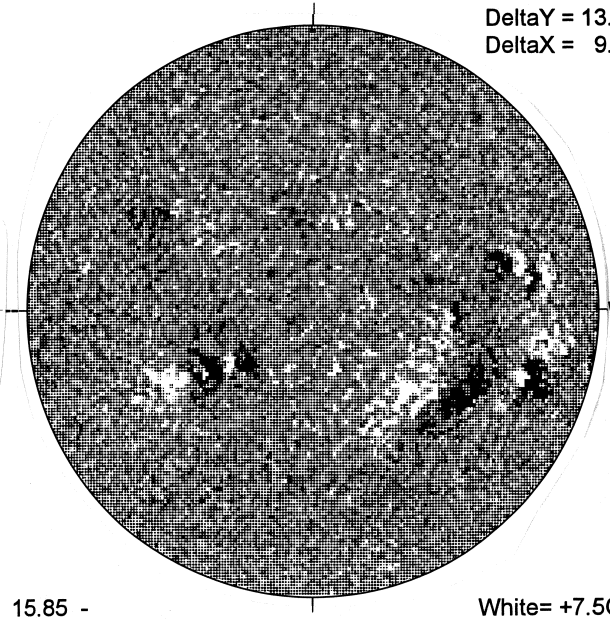

W

15.85 -
16.77 UT

White= +7.5G
Black = -7.5G

----- CATANIA H-ALPHA

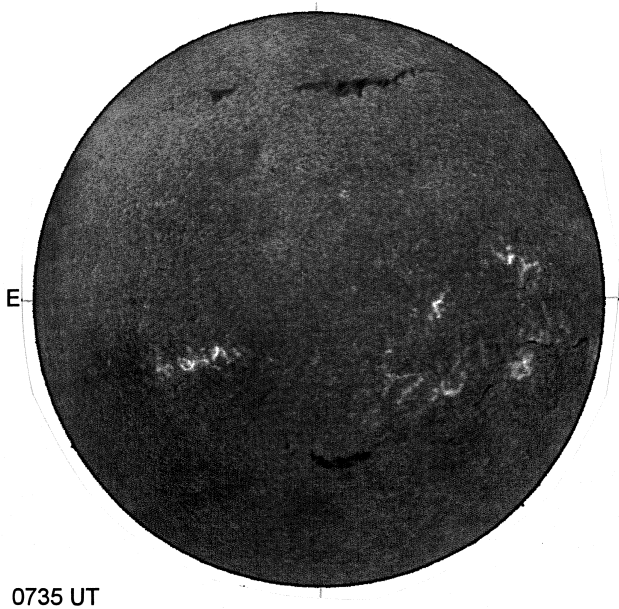

E

0735 UT

S

HOLLOMAN SUNSPOTS

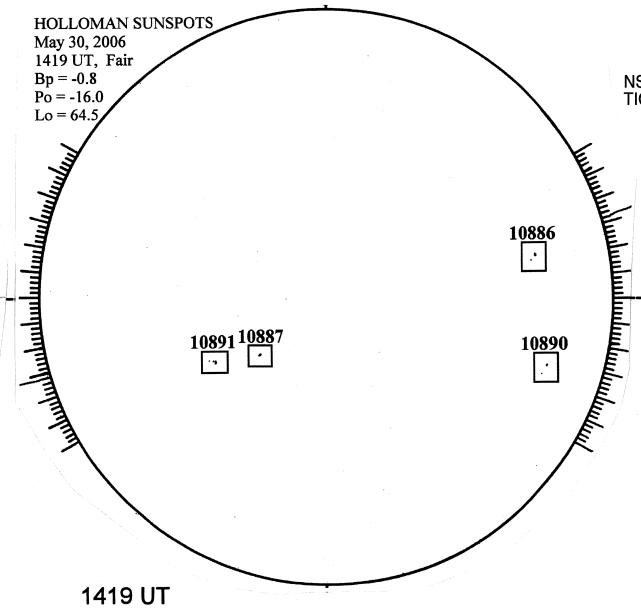

1419 UT

S

SACRAMENTO PEAK CORONA (1.15 Radii)----

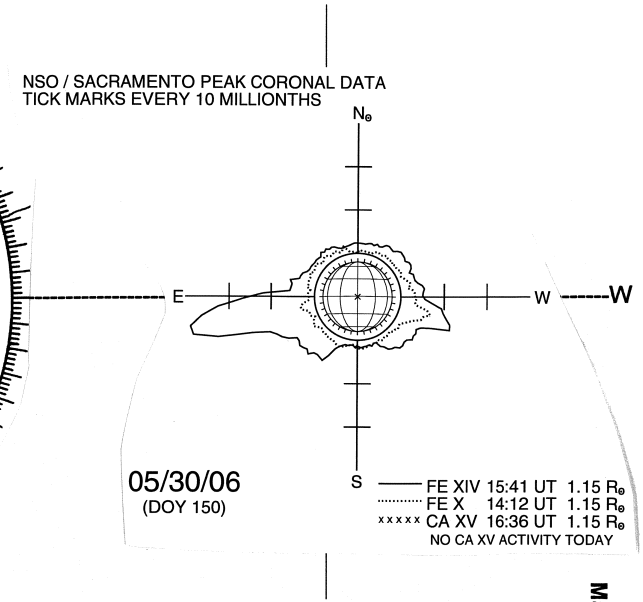

S