MAY 25, 2006 (P= -17.98, Bo = -1.53, Lo = 137.24)

KITT PEAK MAGNETOGRAM--SOLIS

854.2 nm

Bright = +
Dark = -

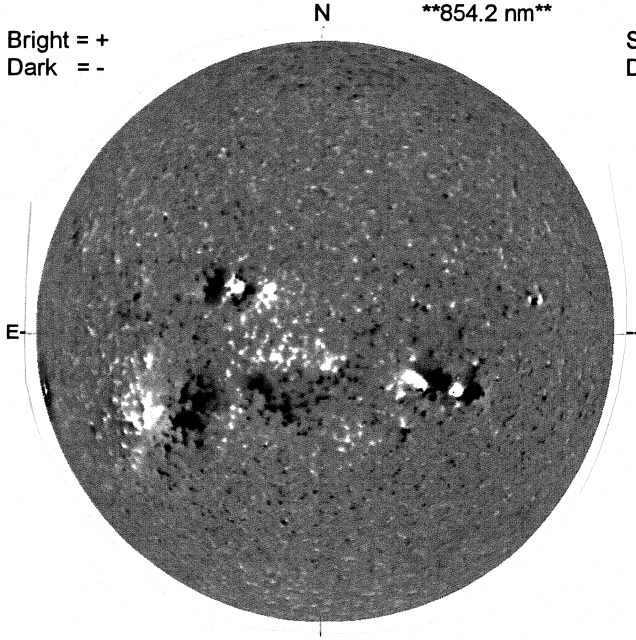

1713 UT

STANFORD MAGNETOGRAM

Solid = +
Dashed = -

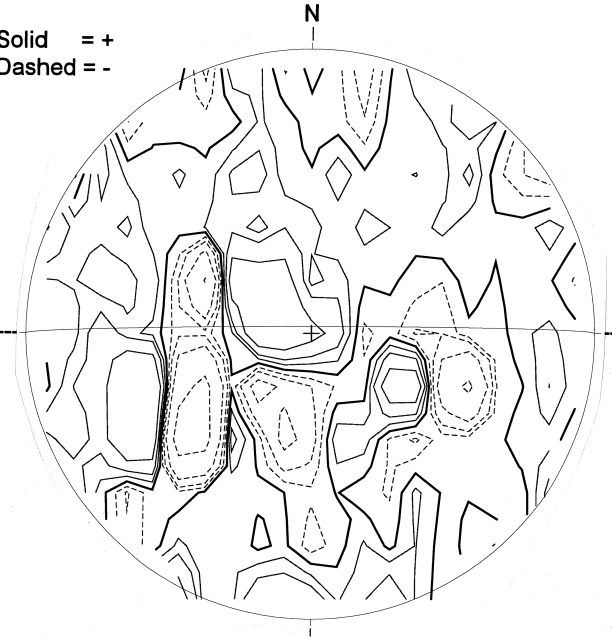

2146 UT

MT. WILSON MAGNETOGRAM

DeltaY = 13.1
DeltaX = 9.6

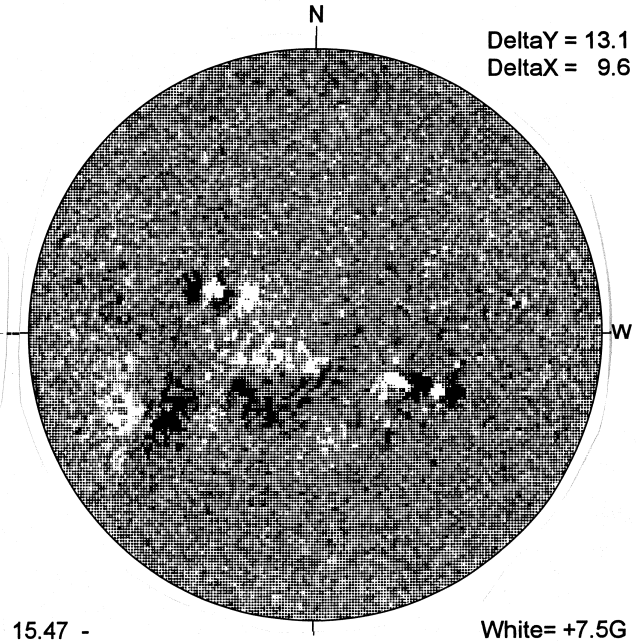

15.47 -
16.39 UT

White= +7.5G
Black = -7.5G

KANZELHOHE H-ALPHA

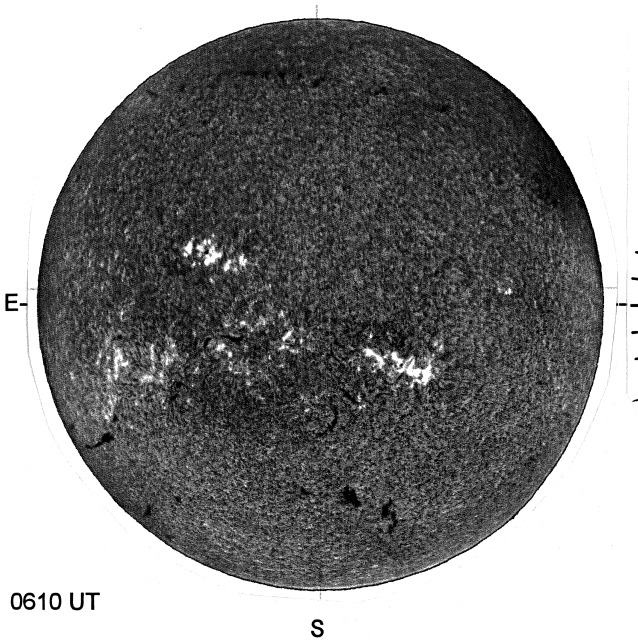

0610 UT

HOLLOMAN SUNSPOTS

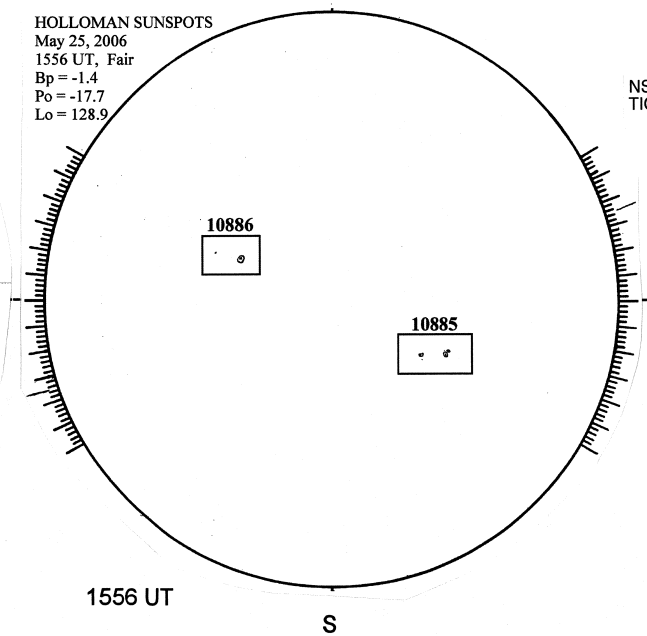

1556 UT
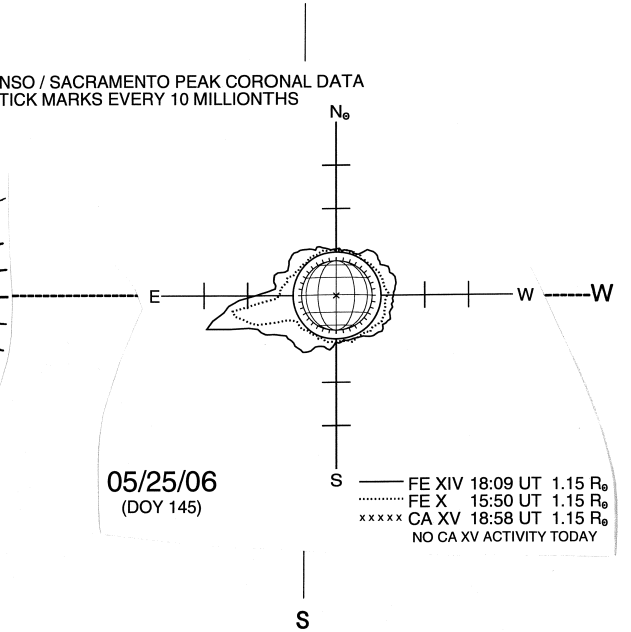
SACRAMENTO PEAK CORONA (1.15 Radii)