MAY 18, 2006 (P= -20.17, Bo = -2.34, Lo = 229.85)

KITT PEAK MAGNETOGRAM--SOLIS

Bright = +
Dark = -

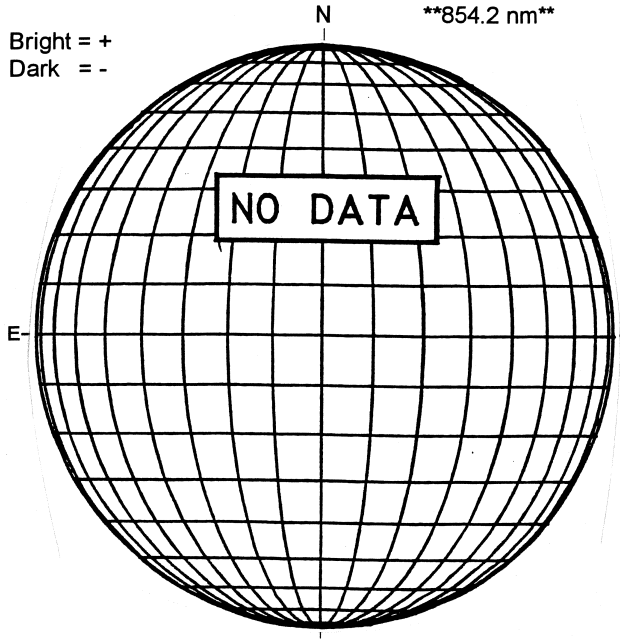

STANFORD MAGNETOGRAM

Solid = +
Dashed = -

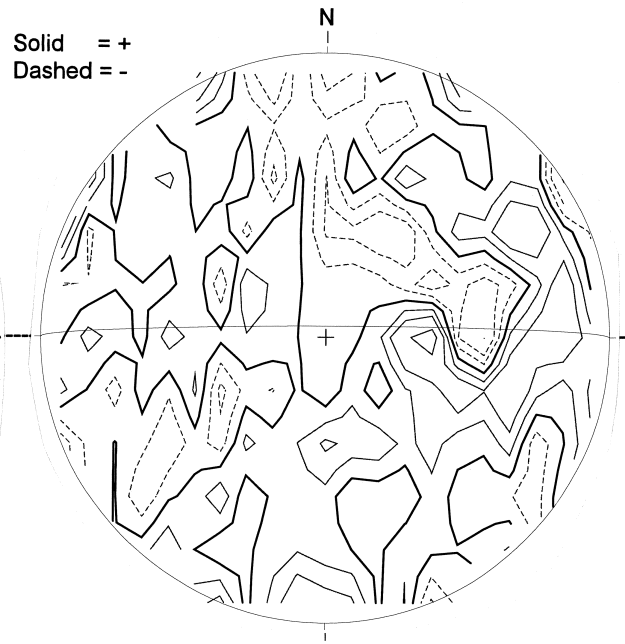

1831 UT

MT. WILSON MAGNETOGRAM

DeltaY = 13.1
DeltaX = 9.6

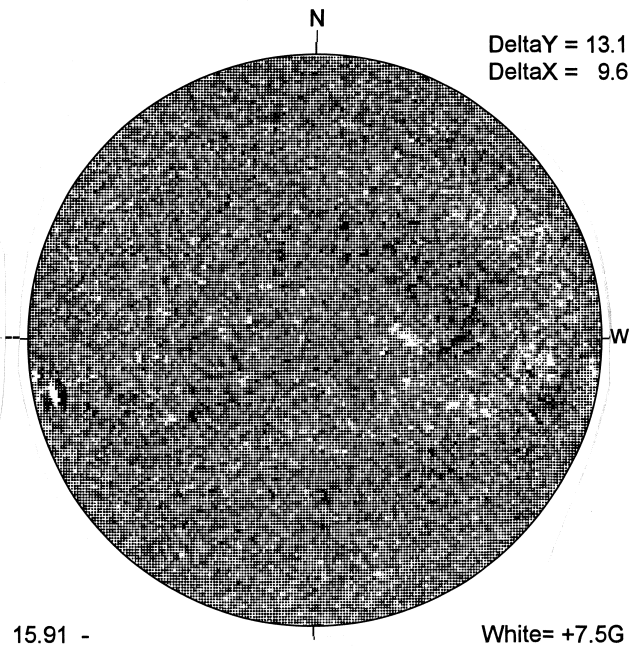

15.91 -
16.84 UT

White= +7.5G
Black = -7.5G

KANZELHOHE H-ALPHA

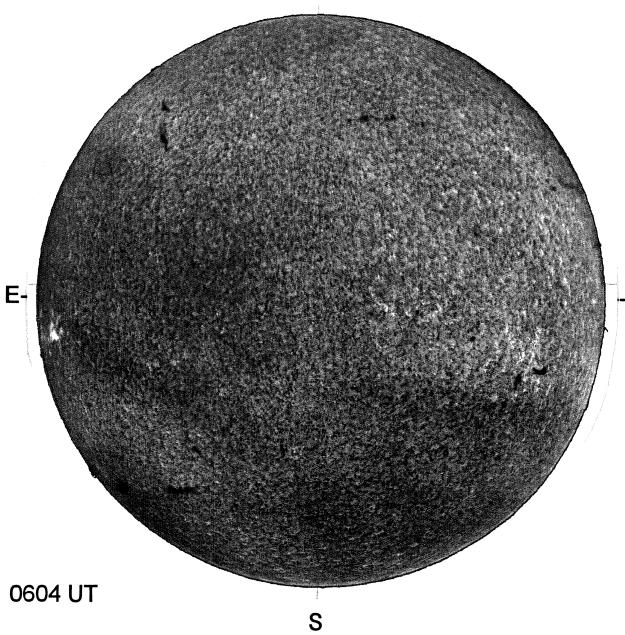

0604 UT

HOLLOMAN SUNSPOTS

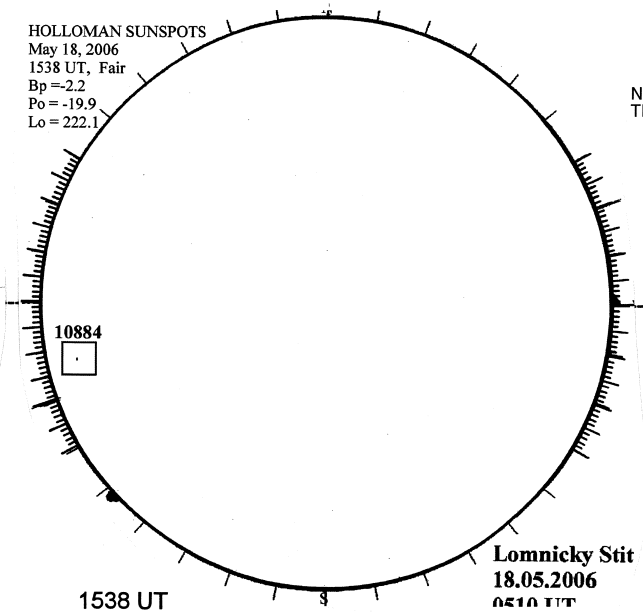

1538 UT
0510 UT LOMN Prom S
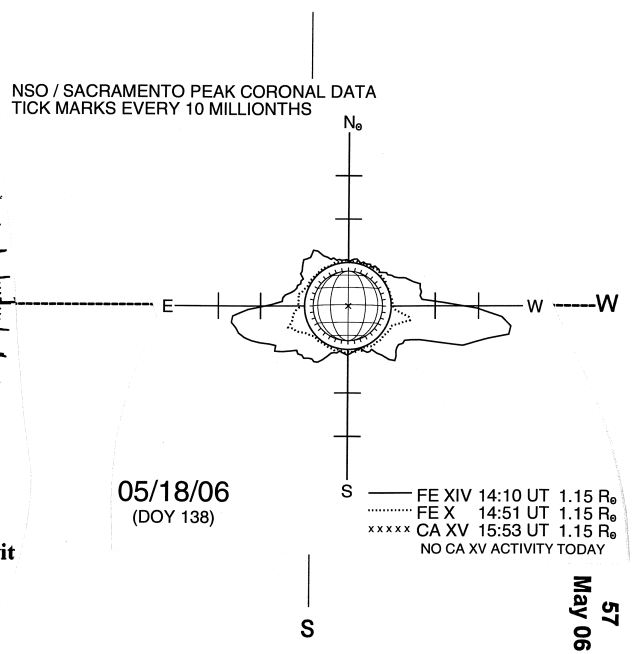
SACRAMENTO PEAK CORONA (1.15 Radii)----