MAY 17, 2006 (P= -20.46, Bo = -2.46, Lo = 243.07)

KITT PEAK MAGNETOGRAM--SOLIS

854.2 nm

Bright = +
Dark = -

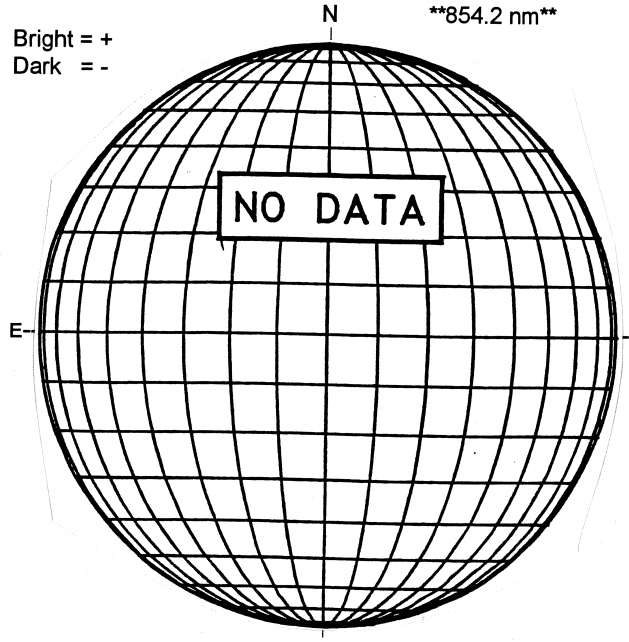

STANFORD MAGNETOGRAM

Solid = +
Dashed = -

1817 UT

MT. WILSON MAGNETOGRAM

DeltaY =
DeltaX =

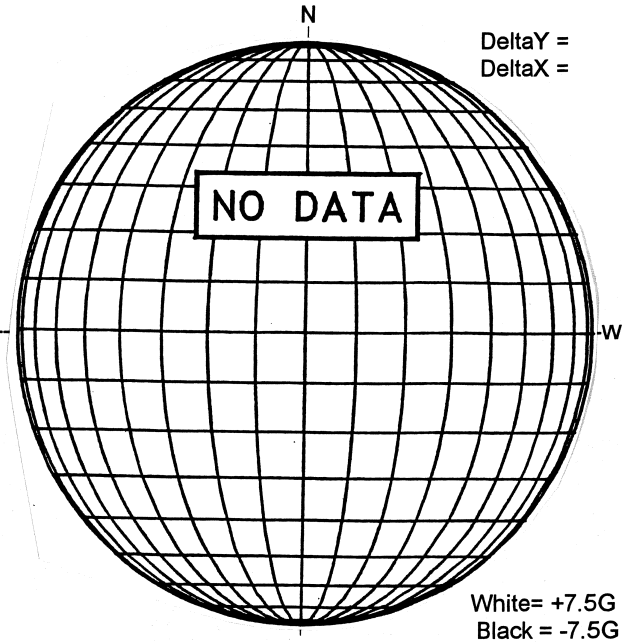

White= +7.5G
Black = -7.5G

CATANIA H-ALPHA

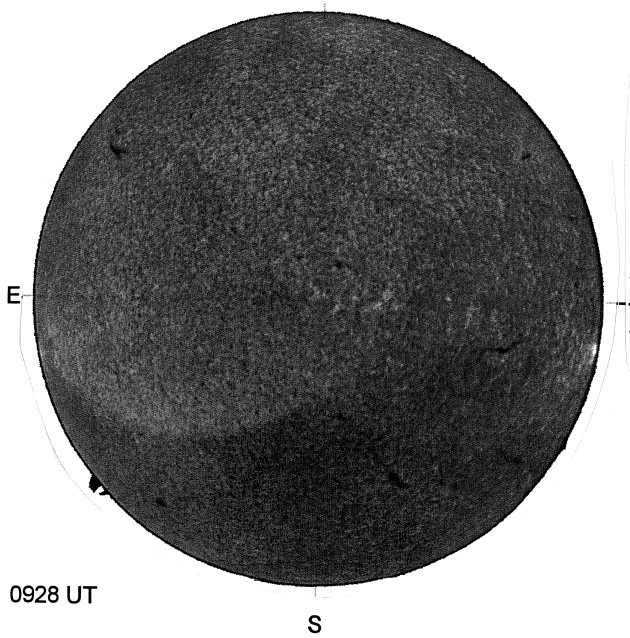

0928 UT

SAN VITO SUNSPOTS

SAN VITO SUNSPOTS
May 17, 2006
0435 UT, Fair
Bp =-2.4
Po = -20.4
Lo = 240.8

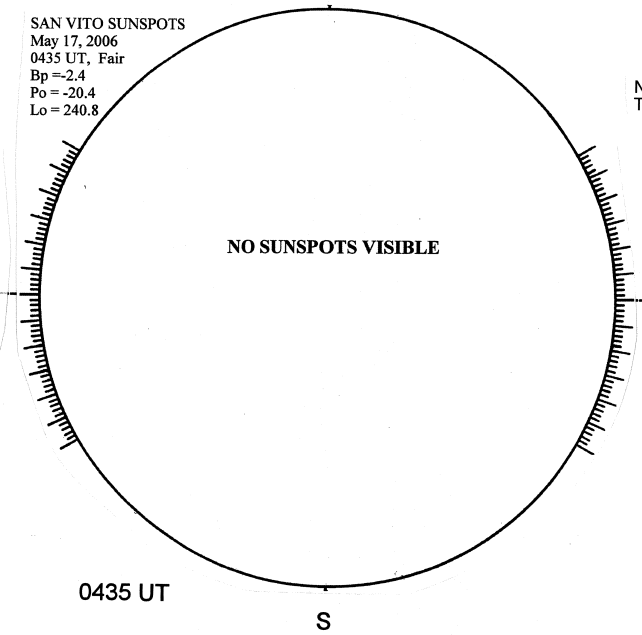

0435 UT

SACRAMENTO PEAK CORONA (1.15 Radii)

NSO / SACRAMENTO PEAK CORONAL DATA
TICK MARKS EVERY 10 MILLIONTHS

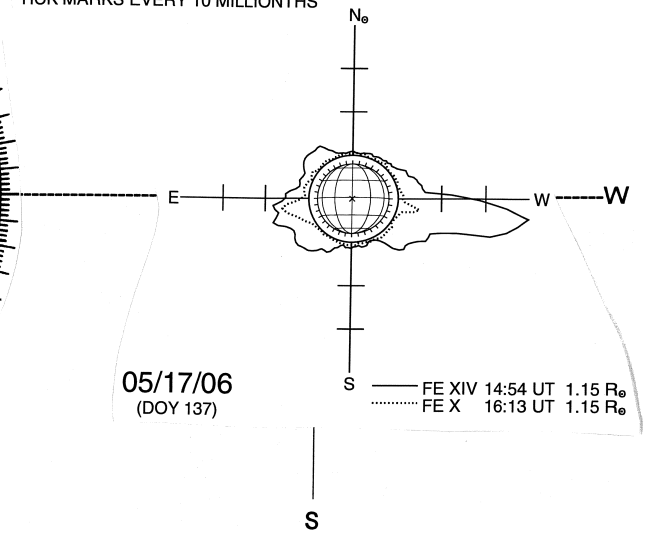

05/17/06
(DOY 137)

FE XIV 14:54 UT 1.15 R⊙
FE X 16:13 UT 1.15 R⊙