MAY 16, 2006 (P= -20.75, Bo = -2.57, Lo = 256.30)

KITT PEAK MAGNETOGRAM--SOLIS

854.2 nm

Bright = +
Dark = -

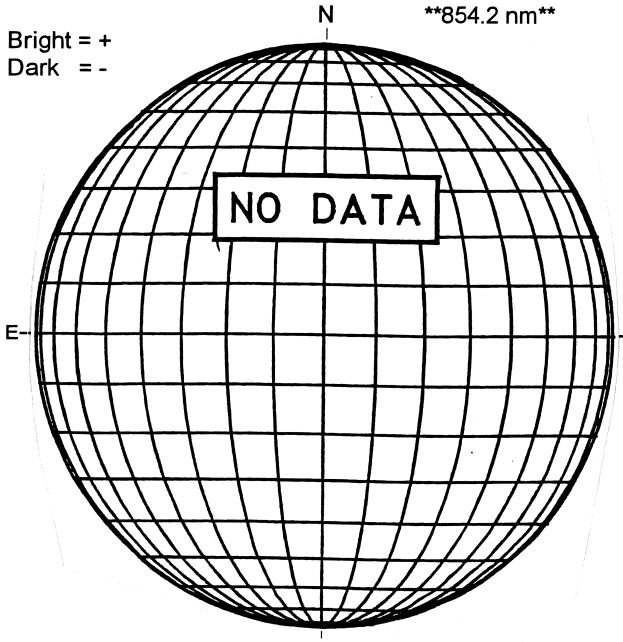

STANFORD MAGNETOGRAM

Solid = +
Dashed = -

1808 UT

MT. WILSON MAGNETOGRAM

DeltaY = 13.1
DeltaX = 9.6

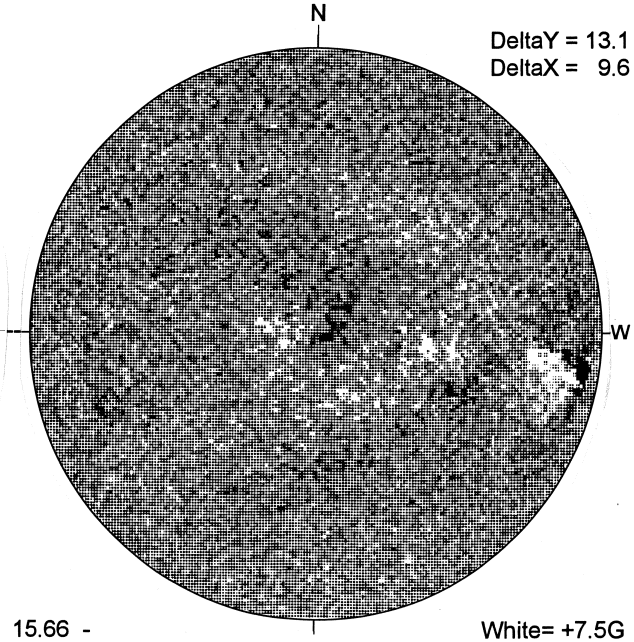

15.66 -
16.58 UT

White= +7.5G
Black = -7.5G

KANZELHOHE H-ALPHA

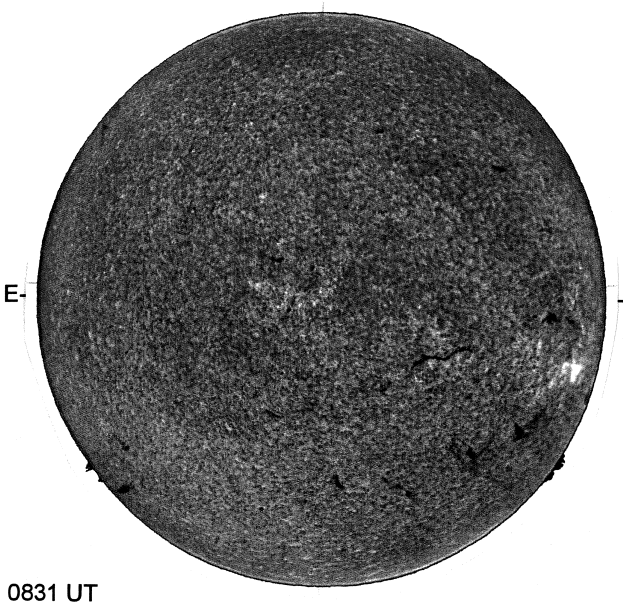

0831 UT

S

ISOON/OSPaN SUNSPOTS

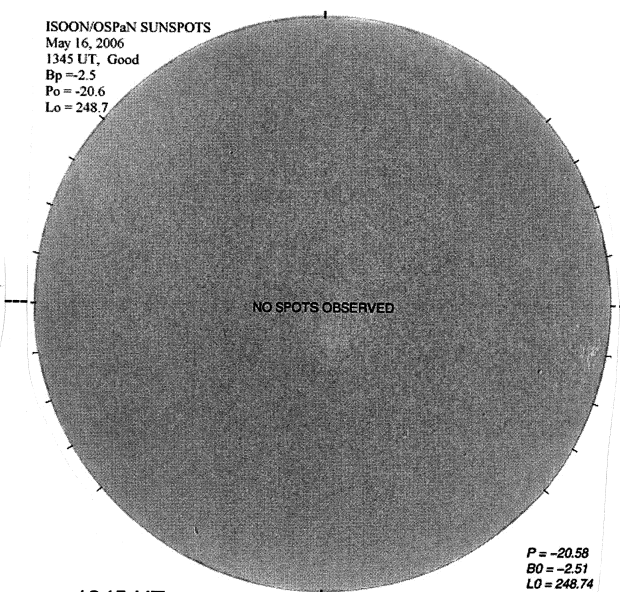

1345 UT

S

SACRAMENTO PEAK CORONA (1.15 Radii)----

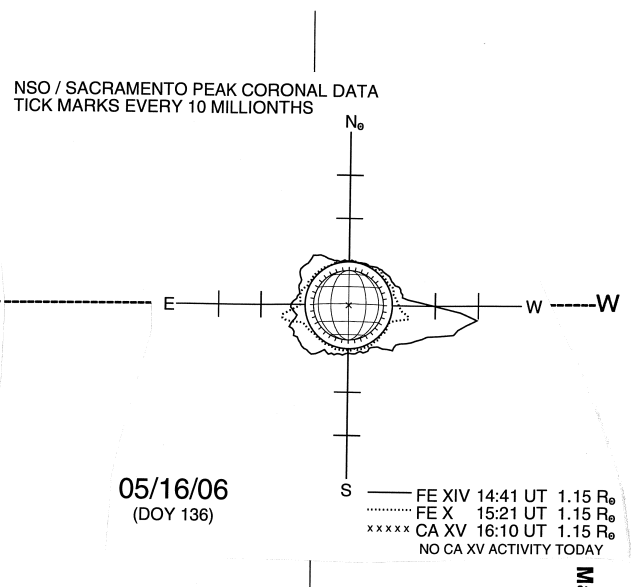

05/16/06
(DOY 136)

S