MAY 11, 2006 (P= -22.06, Bo = -3.13, Lo = 322.42)

KITT PEAK MAGNETOGRAM--SOLIS

854.2 nm

Bright = +
Dark = -

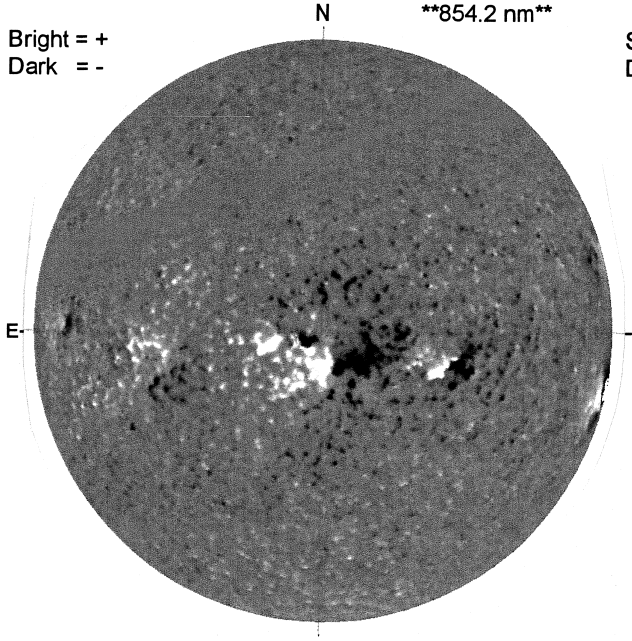

1823 UT

STANFORD MAGNETOGRAM

Solid = +
Dashed = -

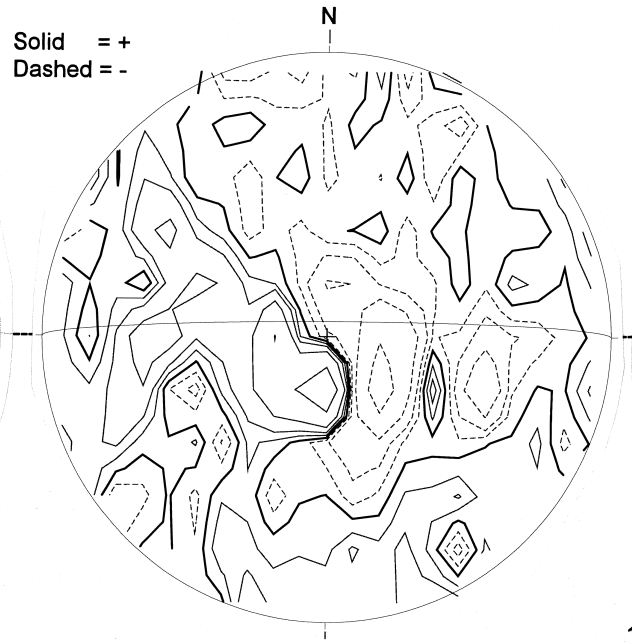

1942 UT

MT. WILSON MAGNETOGRAM

DeltaY = 13.1
DeltaX = 9.6

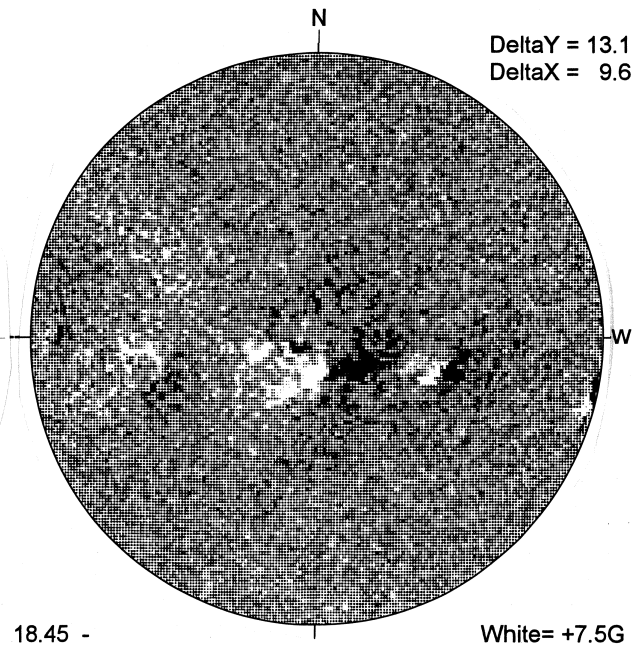

18.45 -
19.38 UT

White= +7.5G
Black = -7.5G

KANZELHOHE H-ALPHA

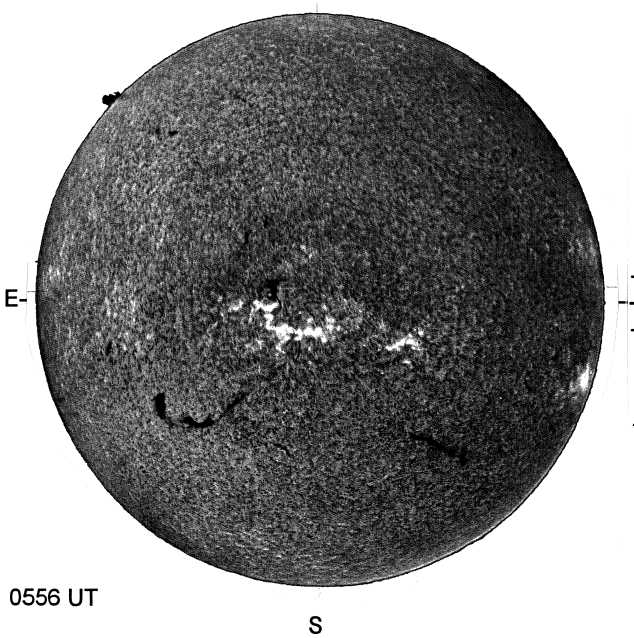

0556 UT

HOLLOMAN SUNSPOTS

HOLLOMAN SUNSPOTS
May 11, 2006
1424 UT, Good
Bp = -3.0
Po = -21.9
Lo = 315.8

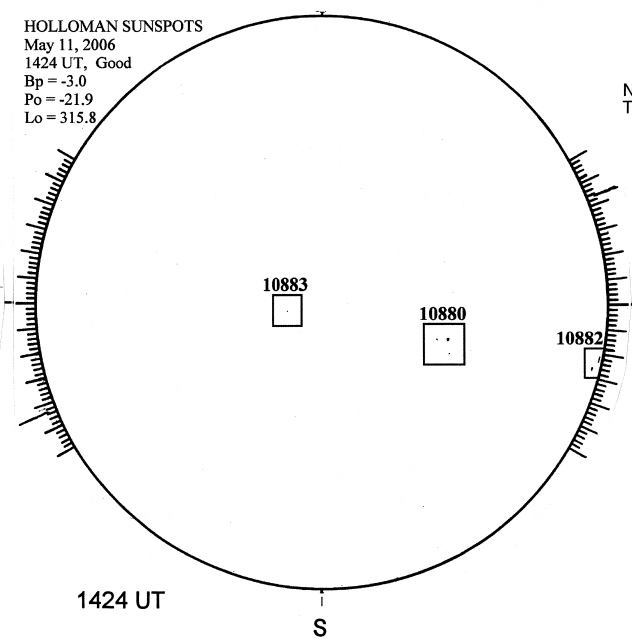

1424 UT

SACRAMENTO PEAK CORONA (1.15 Radii)----

NSO / SACRAMENTO PEAK CORONAL DATA
TICK MARKS EVERY 10 MILLIONTHS

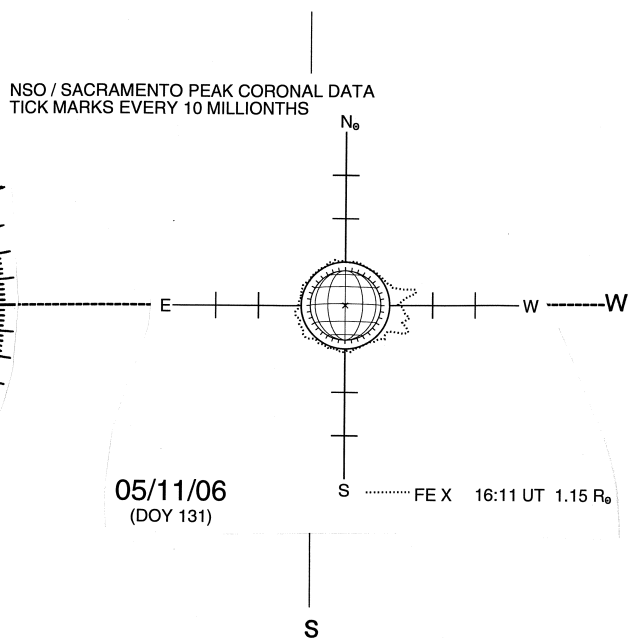

05/11/06
(DOY 131)

FE X 16:11 UT 1.15 R