MAY 9, 2006 (P= -22.54, Bo = -3.35, Lo = 348.87)

KITT PEAK MAGNETOGRAM--SOLIS

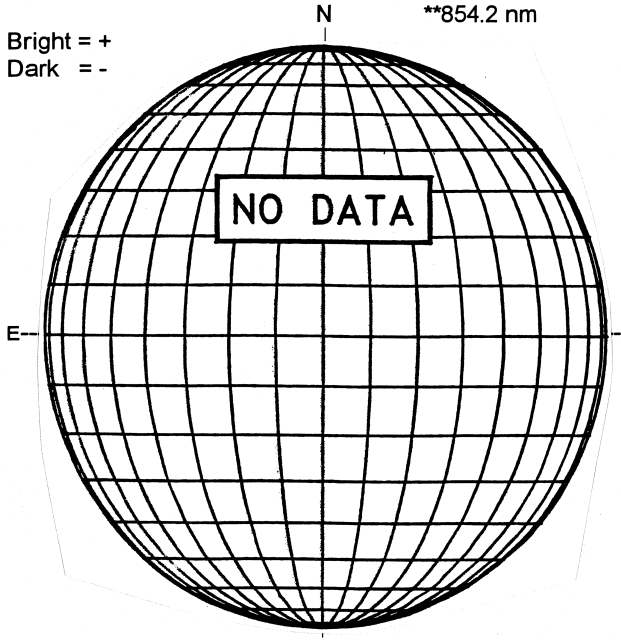

STANFORD MAGNETOGRAM

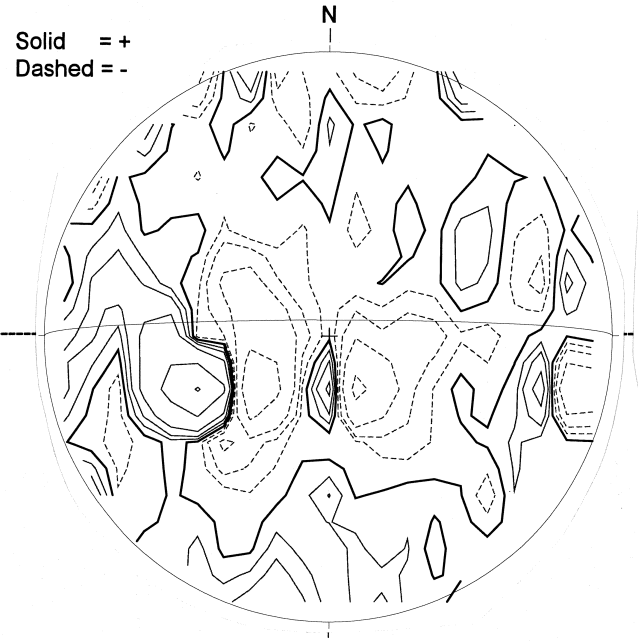

2127 UT

MT. WILSON MAGNETOGRAM

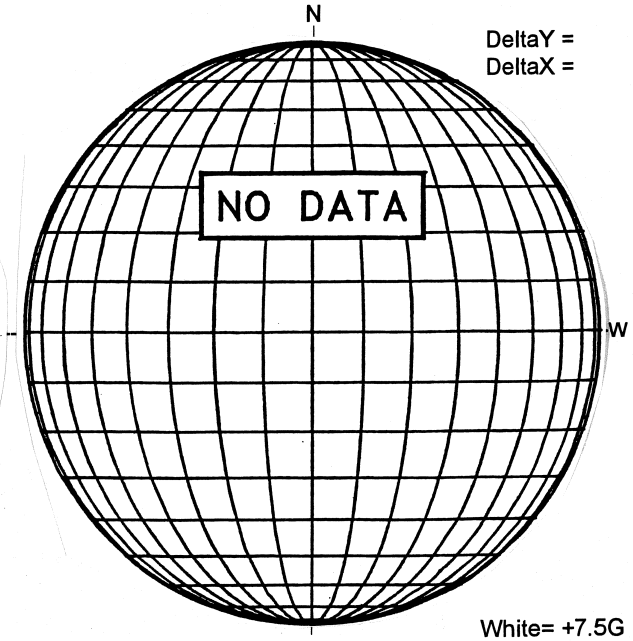

CATANIA H-ALPHA

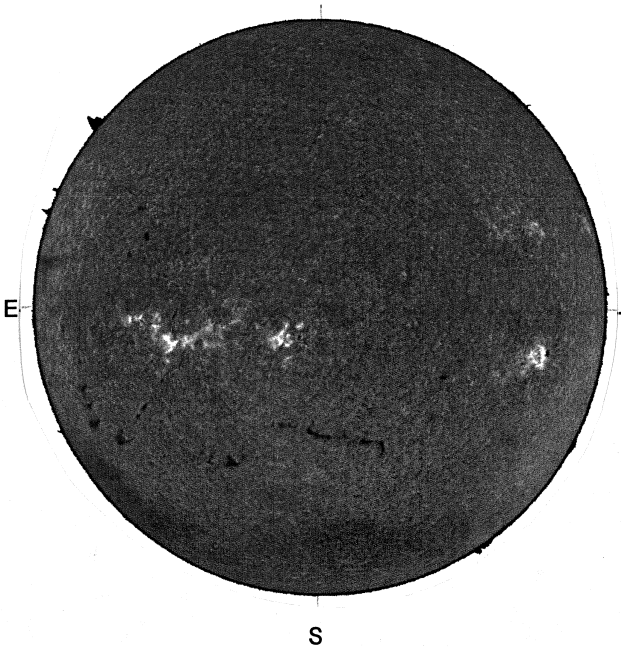

HOLLOMAN SUNSPOTS

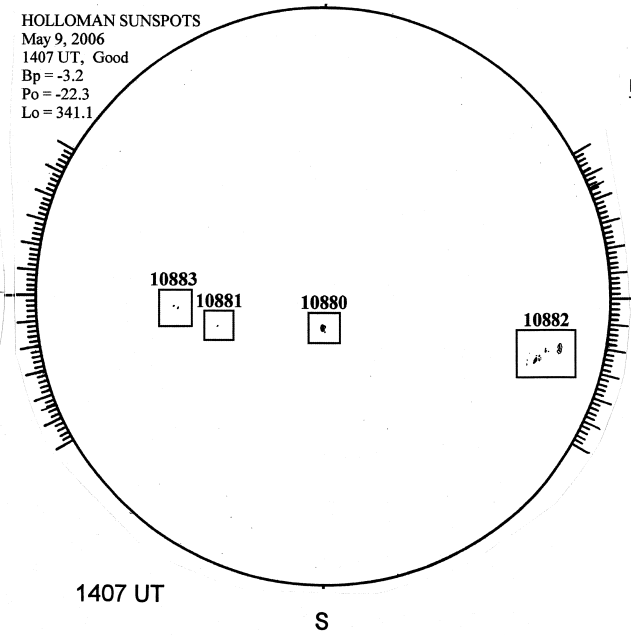

1407 UT
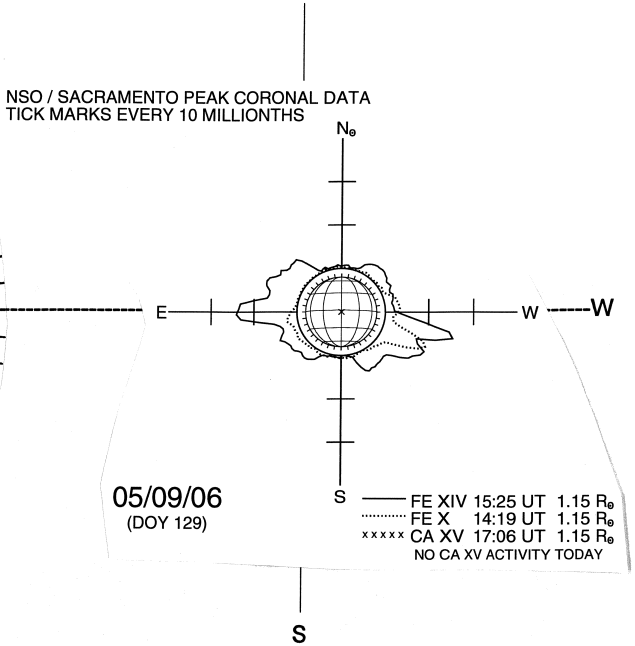
SACRAMENTO PEAK CORONA (1.15 Radii)