**MAY 8, 2006 ( P= -22.77, Bo = -3.46, Lo = 2.09)**

KITT PEAK MAGNETOGRAM--SOLIS

**854.2 nm**

Bright = +
Dark = -

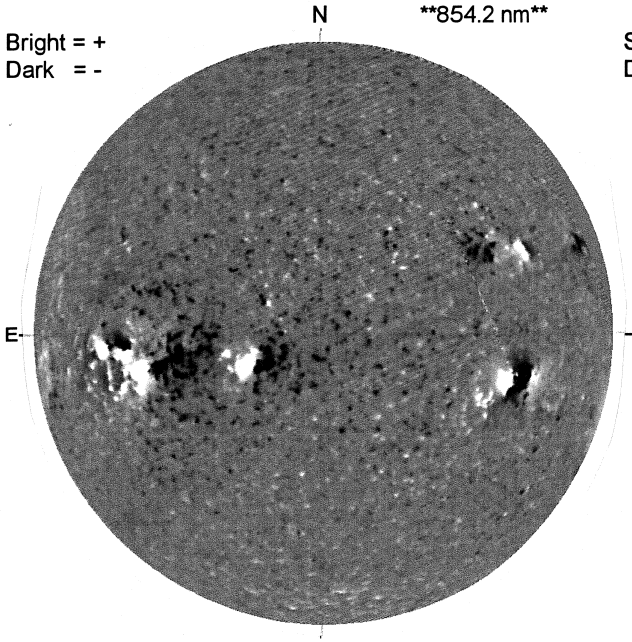


1720 UT

STANFORD MAGNETOGRAM

Solid = +
Dashed = -

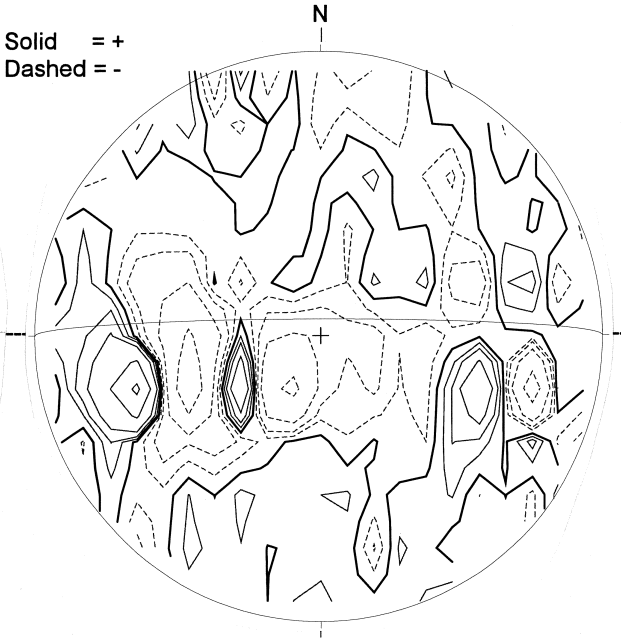


1933 UT

MT. WILSON MAGNETOGRAM

DeltaY = 13.1
DeltaX = 9.6

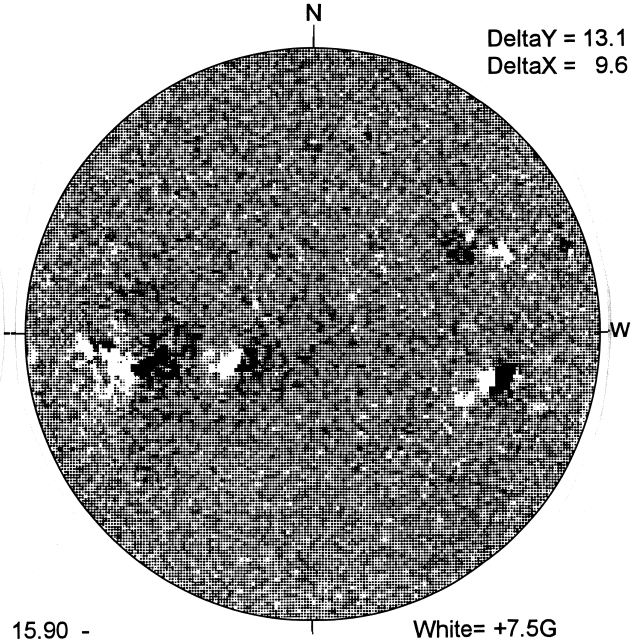


15.90 -
16.83 UT

White= +7.5G
Black = -7.5G

KANZELHOHE H-ALPHA

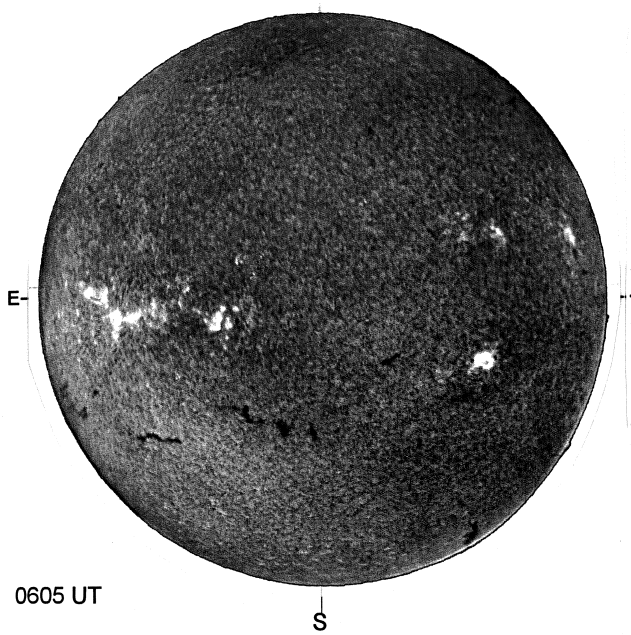


0605 UT

HOLLOMAN SUNSPOTS

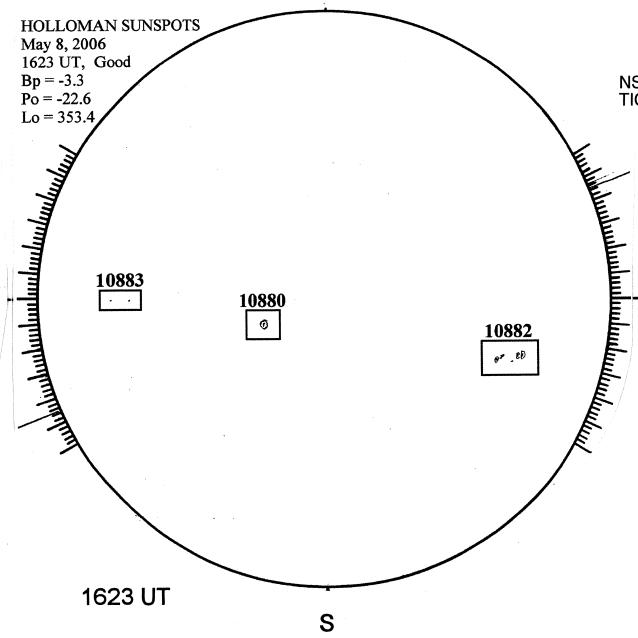


1623 UT
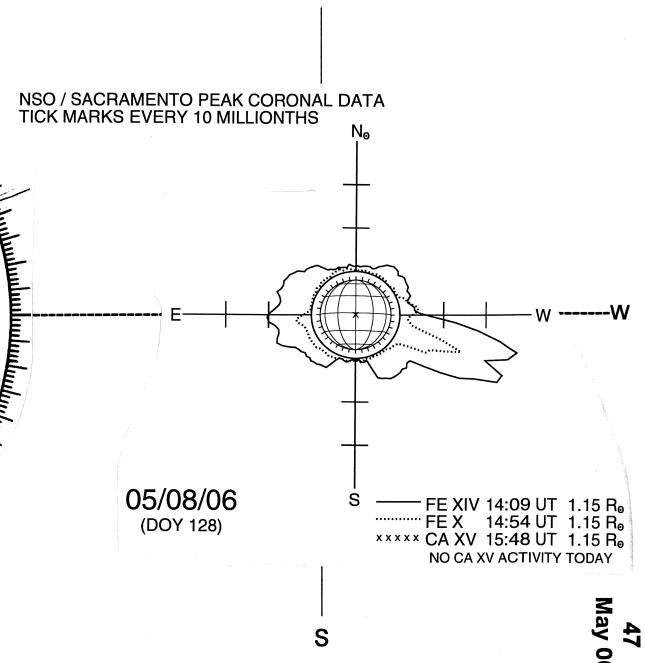
SACRAMENTO PEAK CORONA (1.15 Radii)--