MAY 4, 2006 (P= -23.61, Bo = -3.88, Lo = 54.97)

KITT PEAK MAGNETOGRAM--SOLIS

854.2 nm

Bright = +
Dark = -

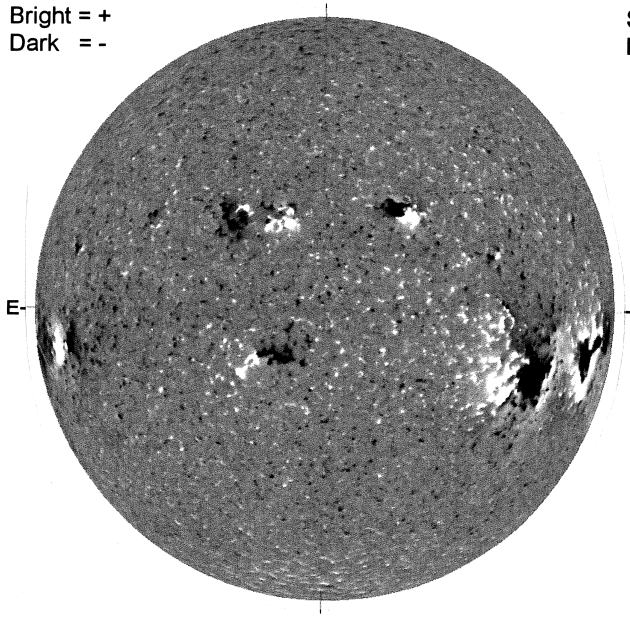

1701 UT

STANFORD MAGNETOGRAM

Solid = +
Dashed = -

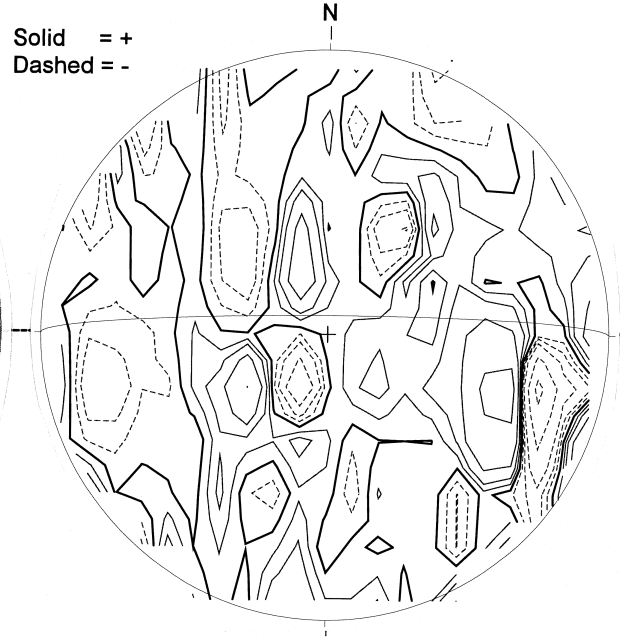

1942 UT

MT. WILSON MAGNETOGRAM

DeltaY = 20.1
DeltaX = 12.9

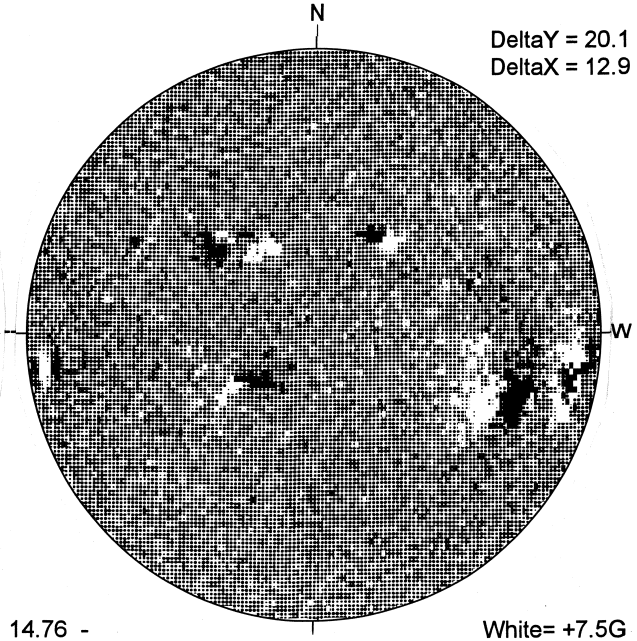

14.76 -
15.17 UT

White= +7.5G
Black = -7.5G

----- MEUDON H-ALPHA

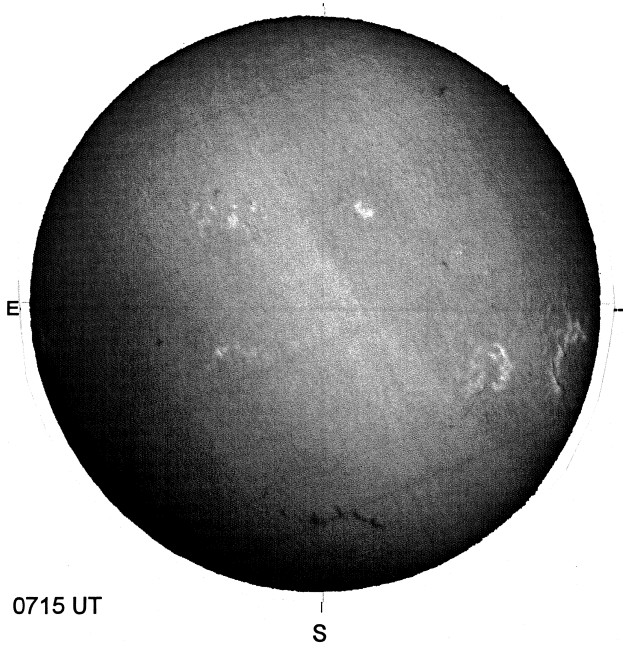

0715 UT

HOLLOMAN SUNSPOTS

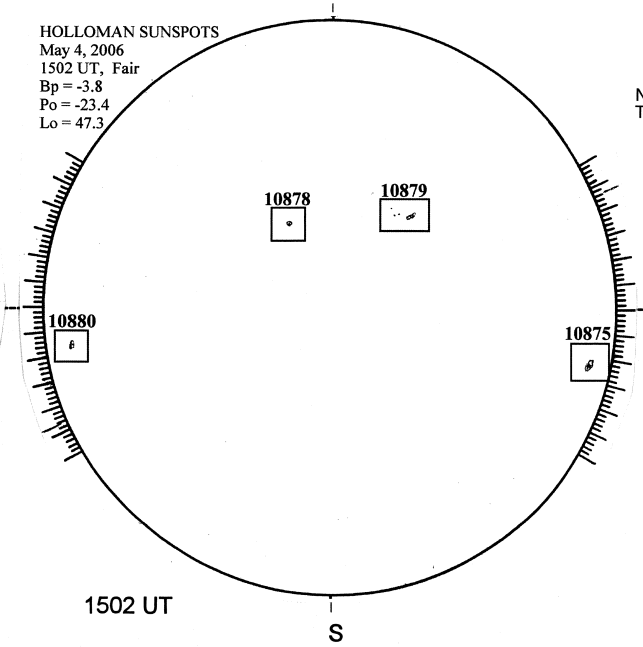

1502 UT

SACRAMENTO PEAK CORONA (1.15 Radii)----

NSO / SACRAMENTO PEAK CORONAL DATA
TICK MARKS EVERY 10 MILLIONTHS

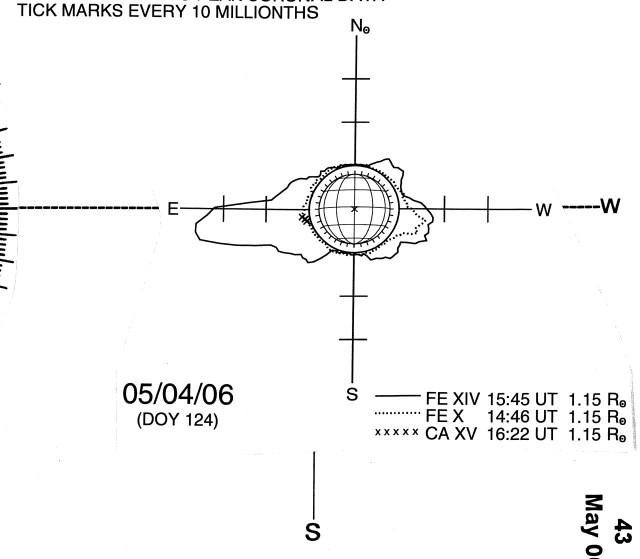

05/04/06
(DOY 124)

S