MAY 2, 2006 (P= -23.99, Bo = -4.09, Lo = 81.40)

KITT PEAK MAGNETOGRAM--SOLIS

854.2 nm

Bright = +
Dark = -

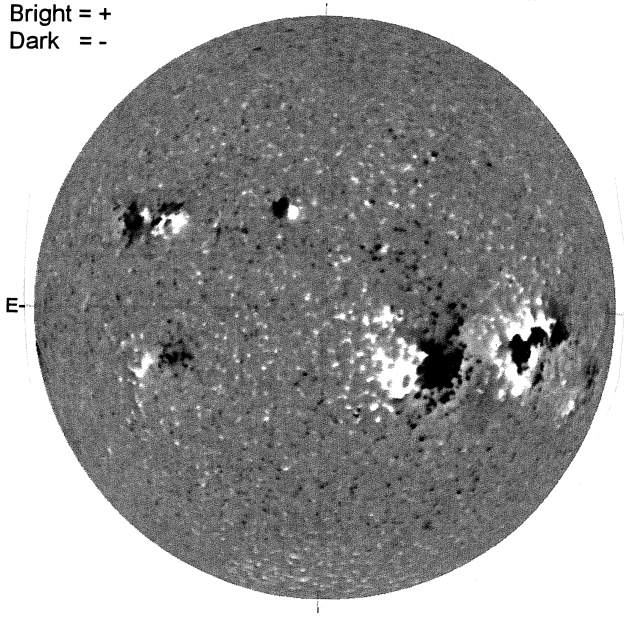

2054 UT

STANFORD MAGNETOGRAM

Solid = +
Dashed = -

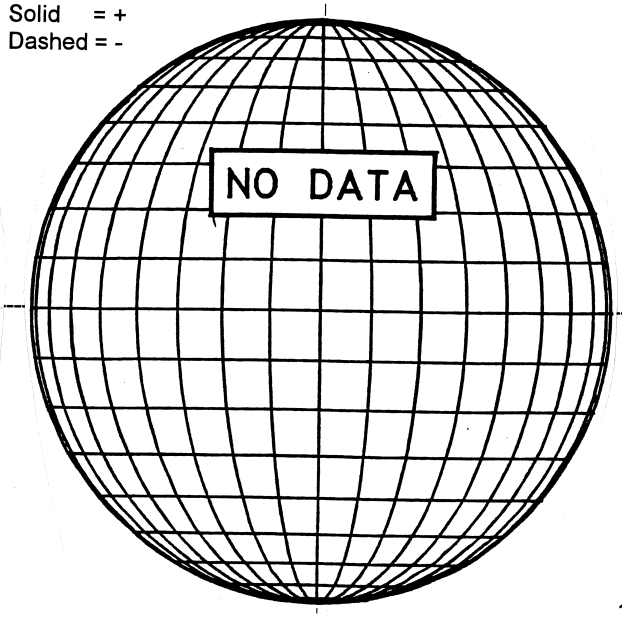

15.76 -
16.70 UT

MT. WILSON MAGNETOGRAM

DeltaY = 13.1
DeltaX = 9.6

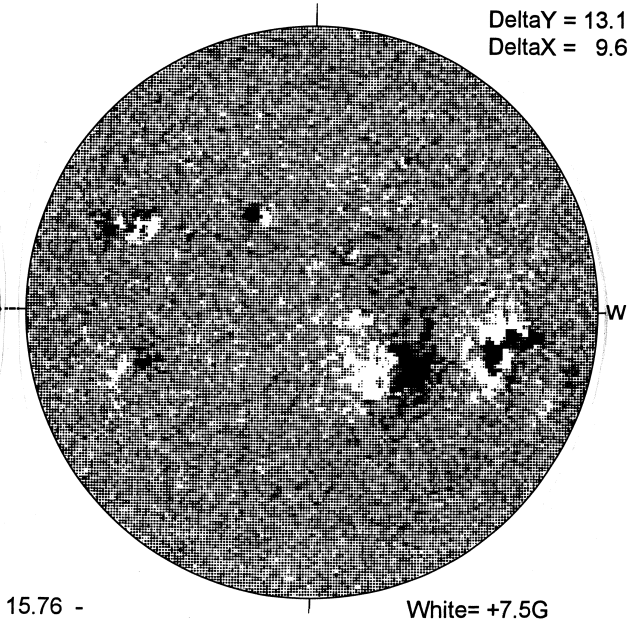

White= +7.5G
Black = -7.5G

KANZELHOHE H-ALPHA

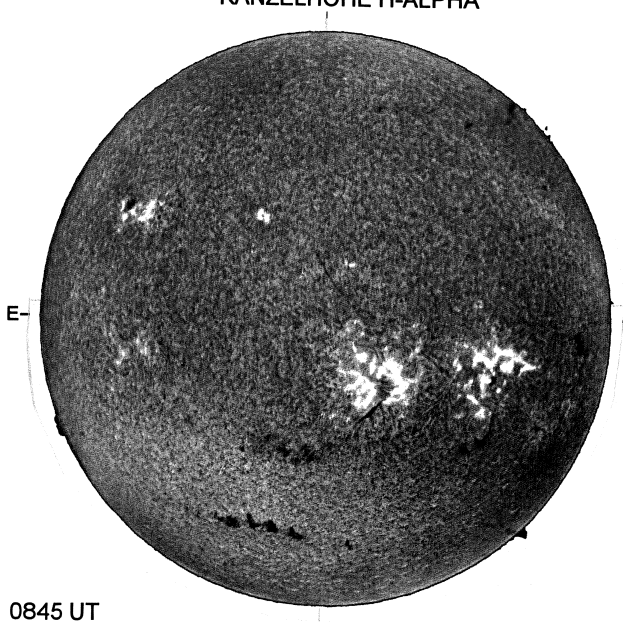

0845 UT

HOLLOMAN SUNSPOTS

HOLLOMAN SUNSPOTS
May 2, 2006
1435 UT, Poor
Bp = -4.0
Po = -23.8
Lo = 73.7

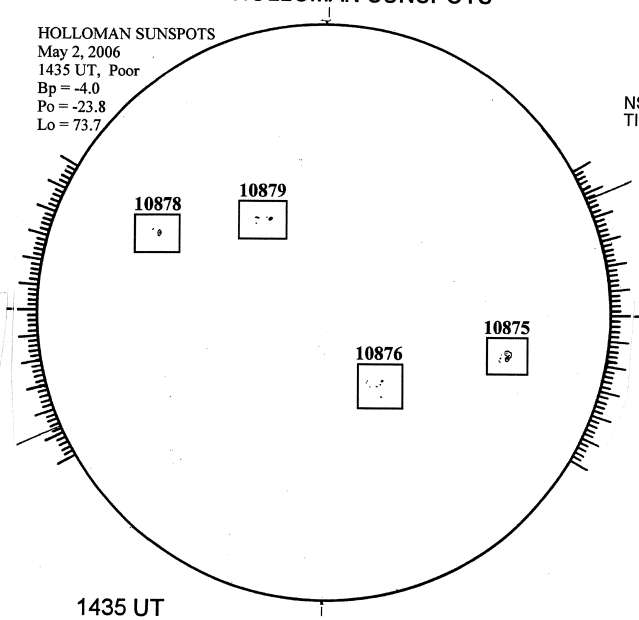

1435 UT

SACRAMENTO PEAK CORONA (1.15 Radii)----

NSO / SACRAMENTO PEAK CORONAL DATA
TICK MARKS EVERY 10 MILLIONTHS

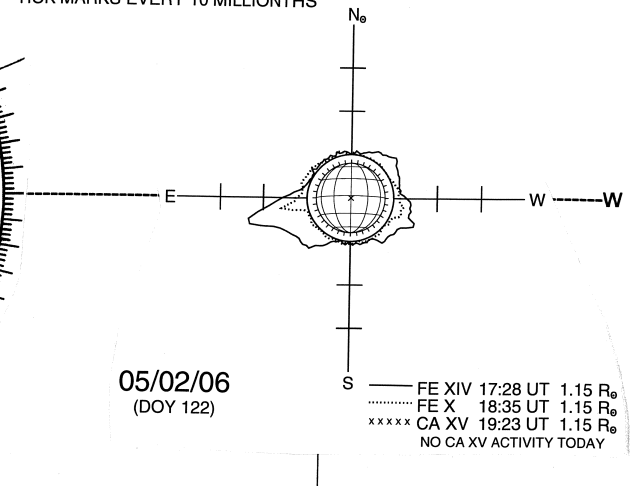

05/02/06
(DOY 122)

FE XIV 17:28 UT 1.15 $R_\odot$
FE X 18:35 UT 1.15 $R_\odot$
xxxxx CA XV 19:23 UT 1.15 $R_\odot$
NO CA XV ACTIVITY TODAY