# MAY 1, 2006 ( P= -24.17, Bo = -4.19, Lo = 94.62)

## KITT PEAK MAGNETOGRAM--SOLIS

**854.2 nm**

Bright = +
Dark = -

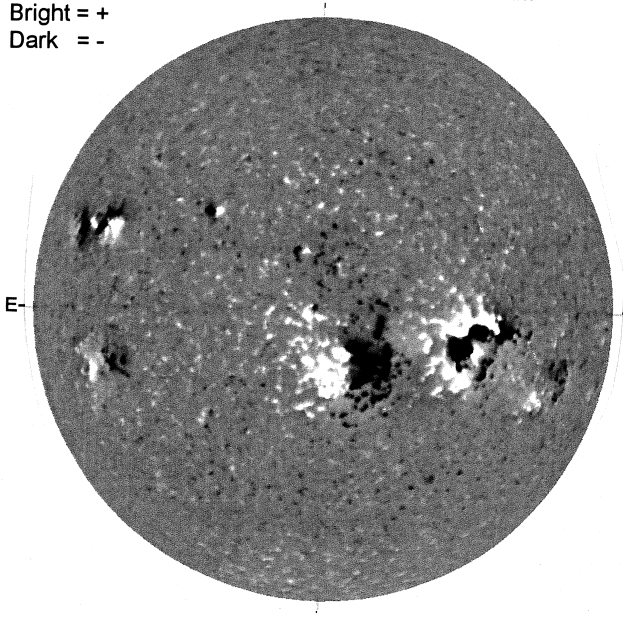


1736 UT

## STANFORD MAGNETOGRAM

Solid = +
Dashed = -

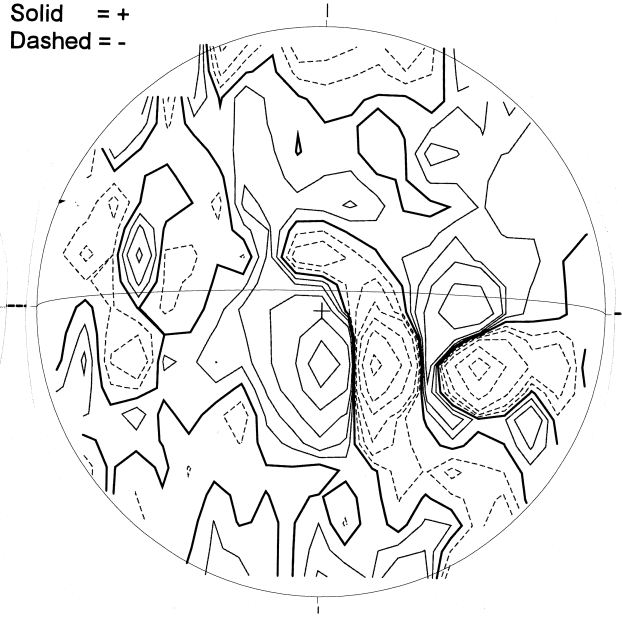


2001 UT

## MT. WILSON MAGNETOGRAM

DeltaY =
DeltaX =

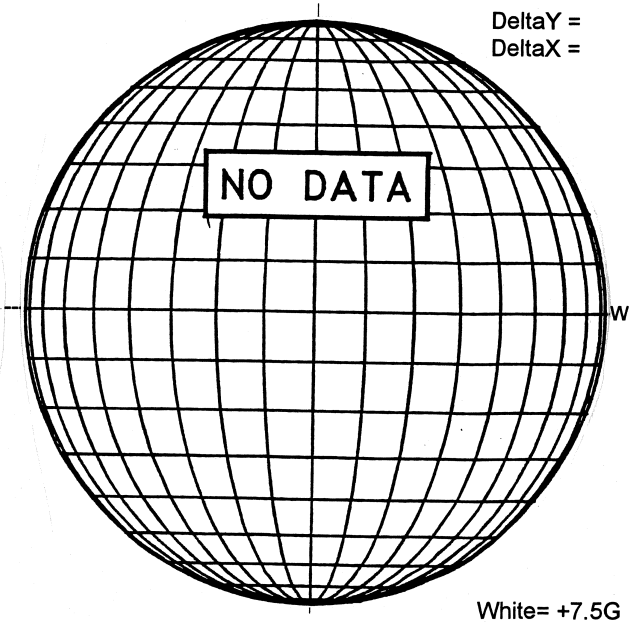


White= +7.5G
Black = -7.5G

## KANZELHOHE H-ALPHA

-----

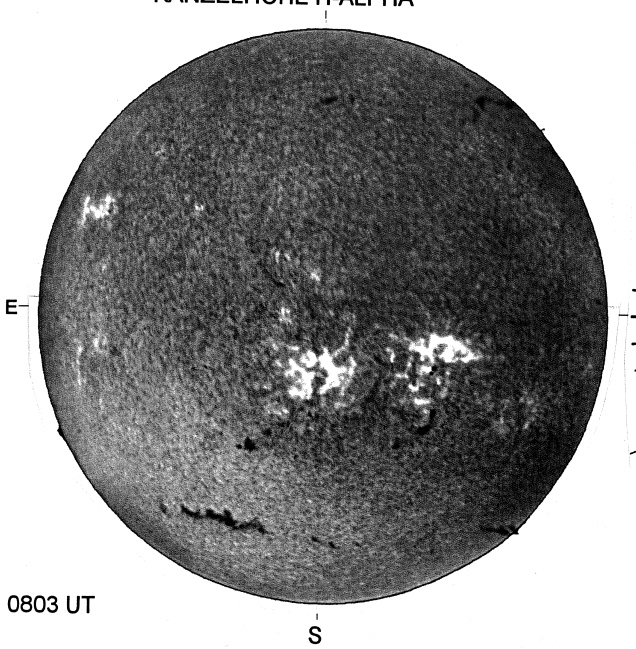


0803 UT

## HOLLOMAN SUNSPOTS

HOLLOMAN SUNSPOTS
May 1, 2006
1640 UT, Fair
Bp = -4.1
Po = -24.0
Lo = 87.8

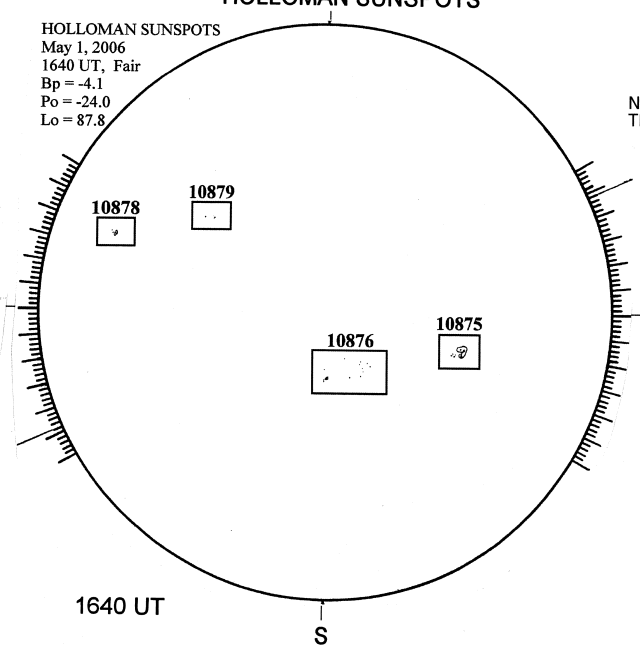


1640 UT

## SACRAMENTO PEAK CORONA (1.15 Radii)----

NSO / SACRAMENTO PEAK CORONAL DATA
TICK MARKS EVERY 10 MILLIONTHS

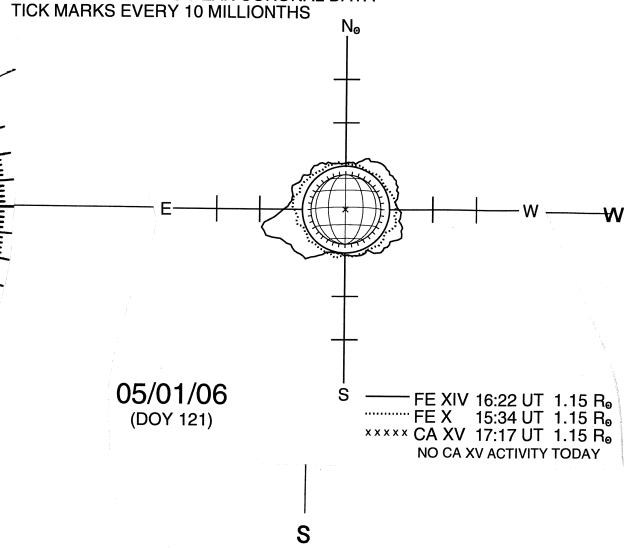


05/01/06
(DOY 121)

FE XIV 16:22 UT 1.15 $R_\odot$
FE X 15:34 UT 1.15 $R_\odot$
xxxxx CA XV 17:17 UT 1.15 $R_\odot$
NO CA XV ACTIVITY TODAY