APRIL 27, 2006 (P= -24.82, Bo = -4.58, Lo = 147.48)

KITT PEAK MAGNETOGRAM--SOLIS

854.2 nm

Bright = +
Dark = -

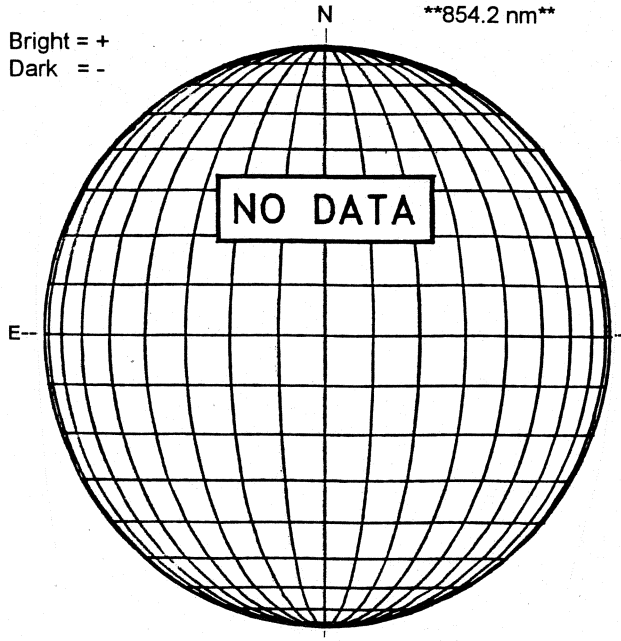

STANFORD MAGNETOGRAM

Solid = +
Dashed = -

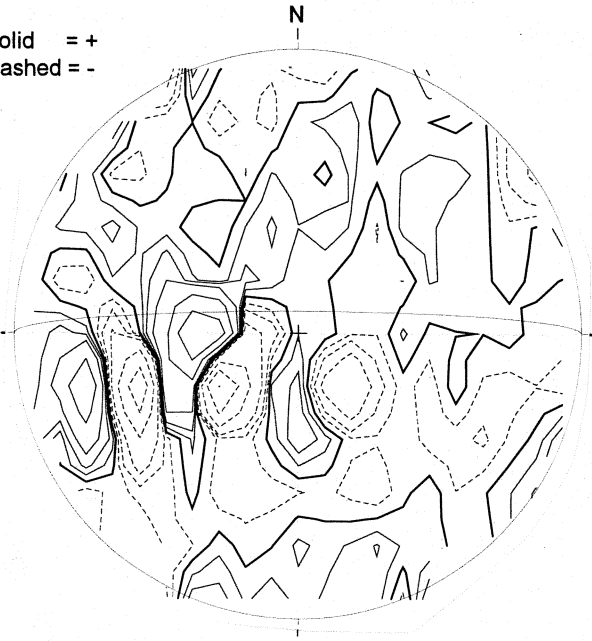

2313 UT

MT. WILSON MAGNETOGRAM

DeltaY =
DeltaX =

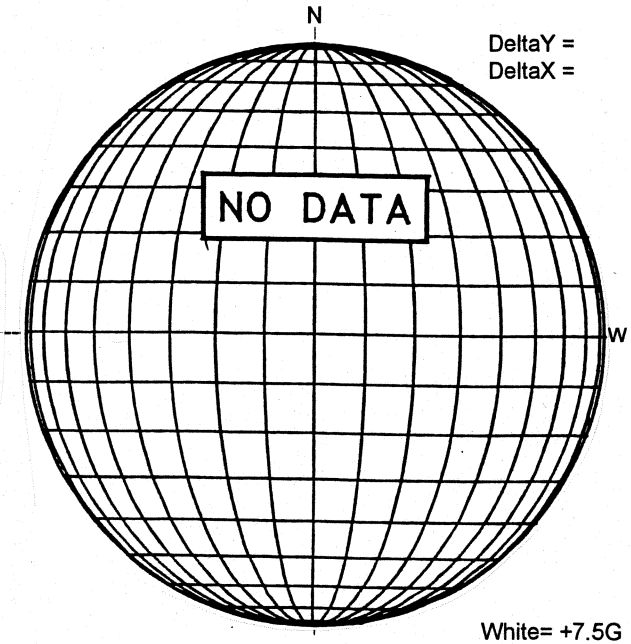

White= +7.5G
Black = -7.5G

MEUDON H-ALPHA

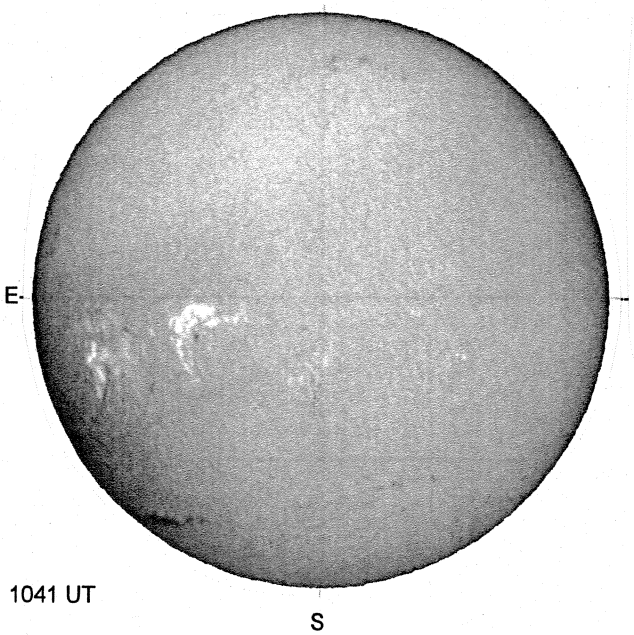

1041 UT

HOLLOMAN SUNSPOTS

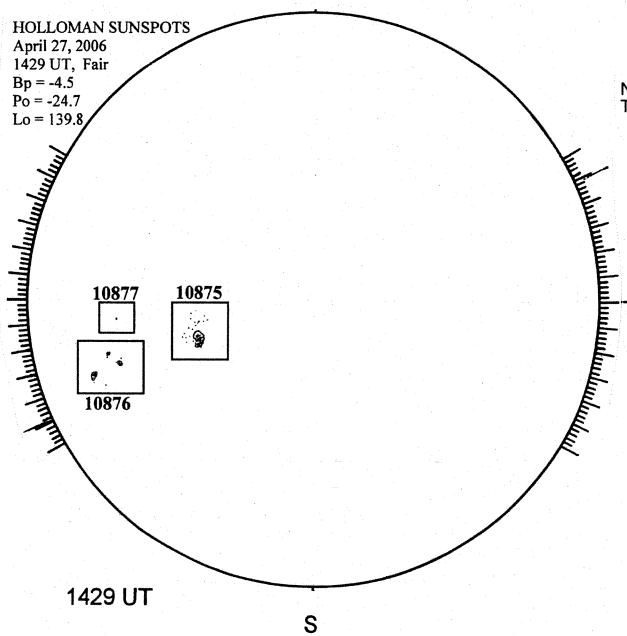

1429 UT
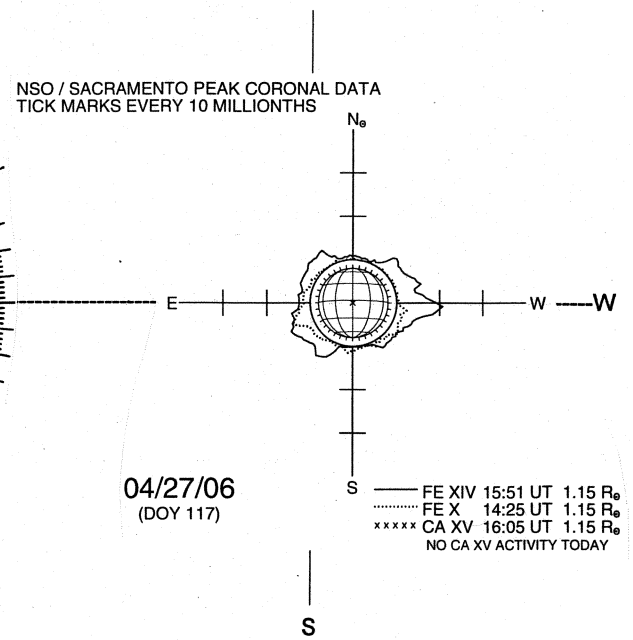
SACRAMENTO PEAK CORONA (1.15 Radii)----