APRIL 19, 2006 (P= -25.76, Bo = -5.30, Lo = 253.16)

KITT PEAK MAGNETOGRAM--SOLIS

854.2 nm

Bright = +
Dark = -

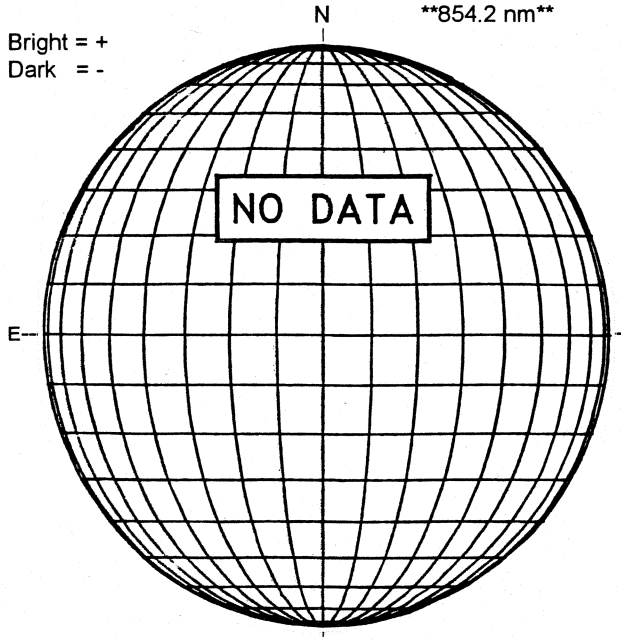

STANFORD MAGNETOGRAM

Solid = +
Dashed = -

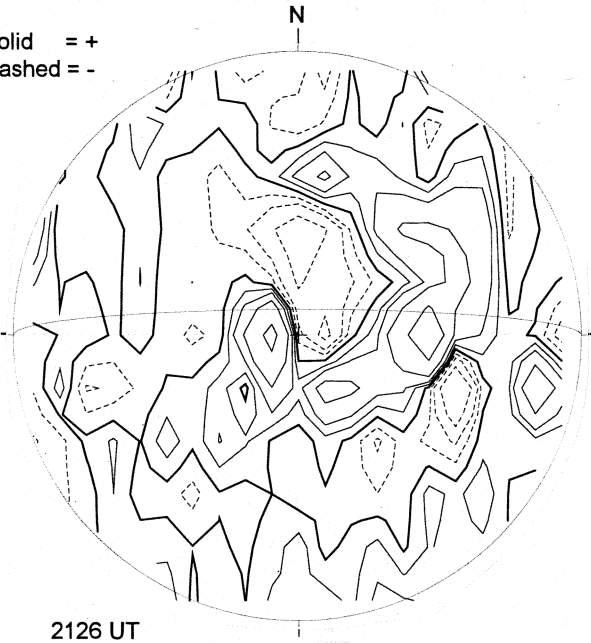

2126 UT

MT. WILSON MAGNETOGRAM

DeltaY = 13.1
DeltaX = 9.6

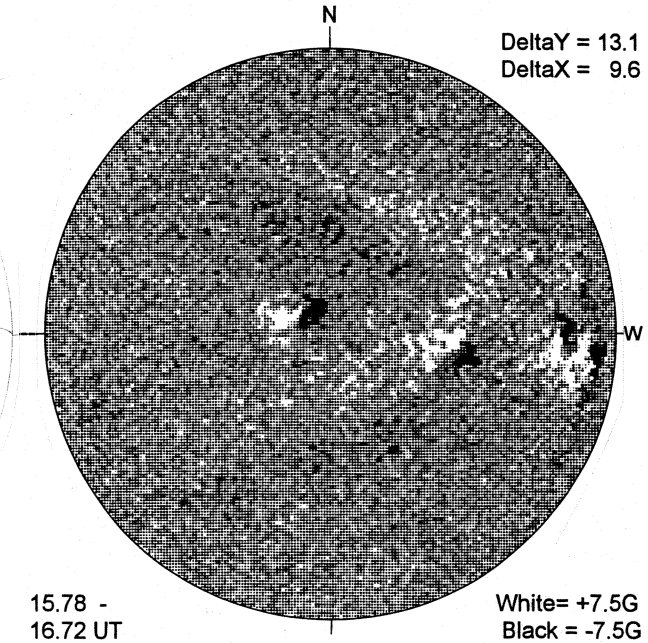

15.78 -
16.72 UT

White= +7.5G
Black = -7.5G

CATANIA H-ALPHA

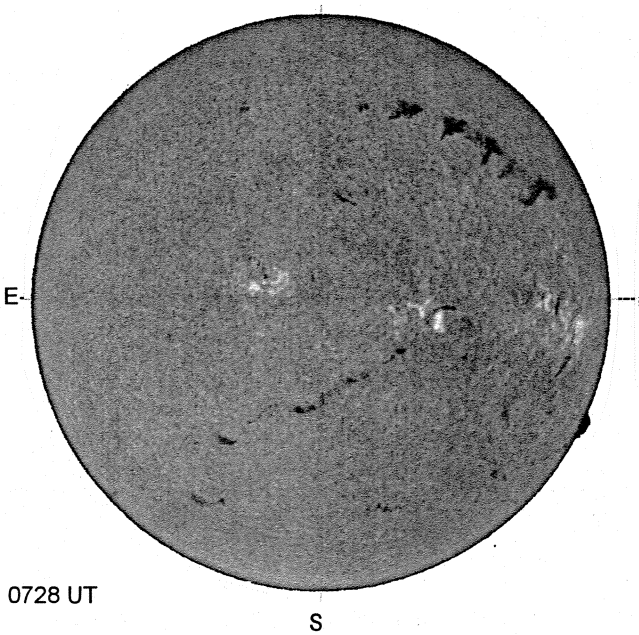

0728 UT

ISOON/OSPaN SUNSPOTS

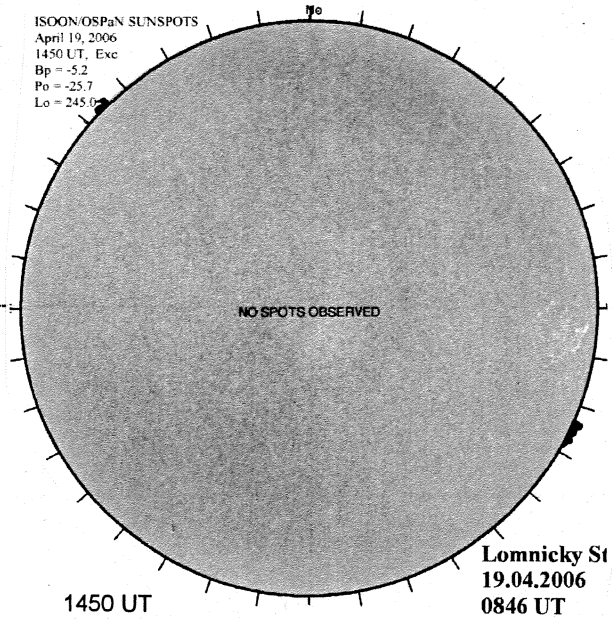

1450 UT
0846 UT LOMN Prom S

SACRAMENTO PEAK CORONA (1.15 Radii)

NSO / SACRAMENTO PEAK CORONAL DATA
TICK MARKS EVERY 10 MILLIONTHS

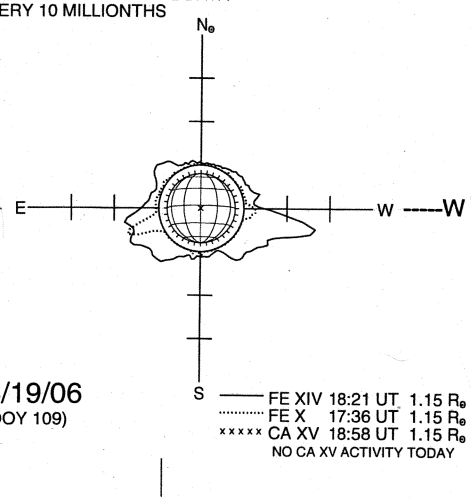

04/19/06
(DOY 109)

FE XIV 18:21 UT 1.15 $R_\odot$
FE X 17:36 UT 1.15 $R_\odot$
CA XV 18:58 UT 1.15 $R_\odot$
NO CA XV ACTIVITY TODAY

S