APRIL 11, 2006 (P= -26.23, Bo = -5.93, Lo = 358.79)

KITT PEAK MAGNETOGRAM--SOLIS

854.2 nm

Bright = +
Dark = -

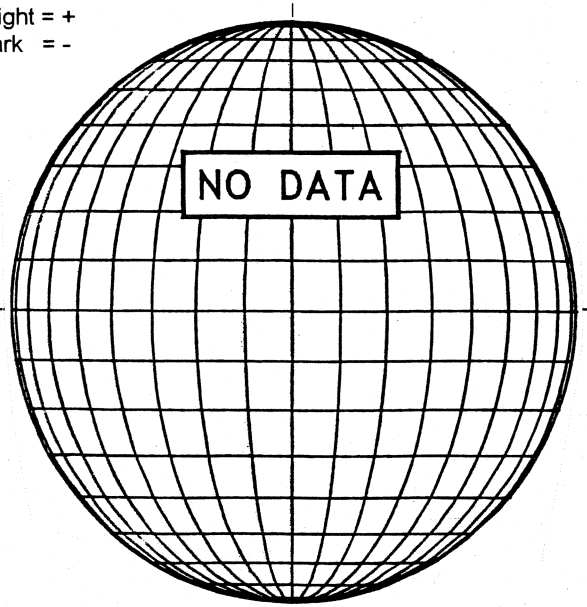

STANFORD MAGNETOGRAM

Solid = +
Dashed = -

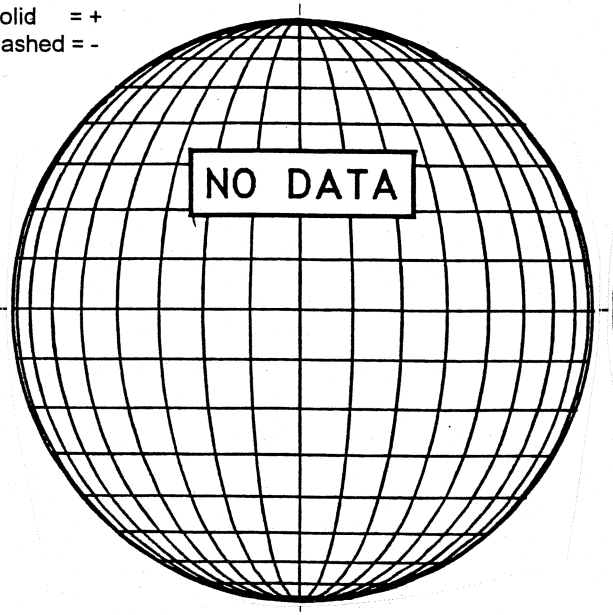

MT. WILSON MAGNETOGRAM

DeltaY =
DeltaX =

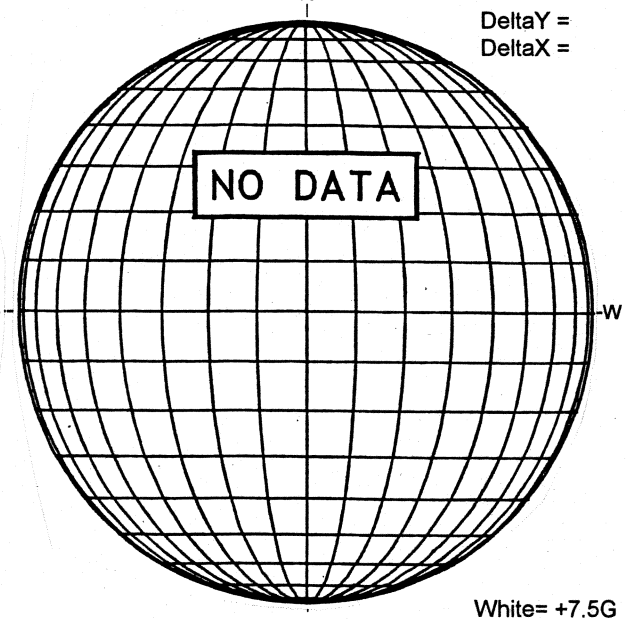

White= +7.5G
Black = -7.5G

MEUDON H-ALPHA

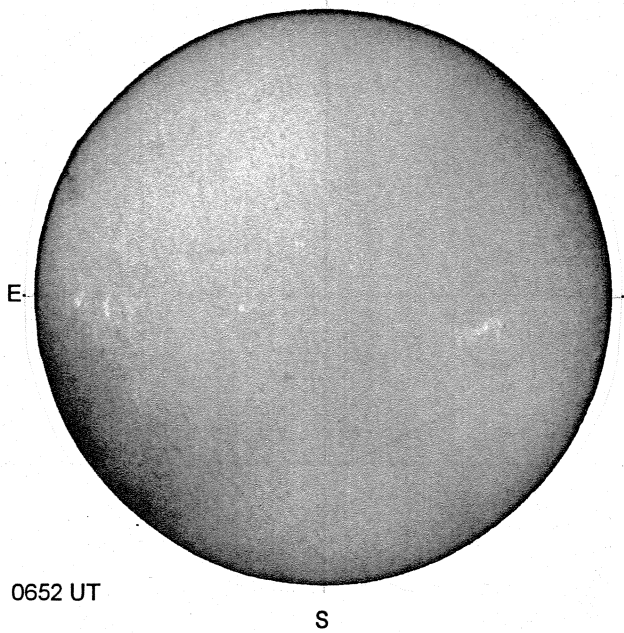

0652 UT

HOLLOMAN SUNSPOTS

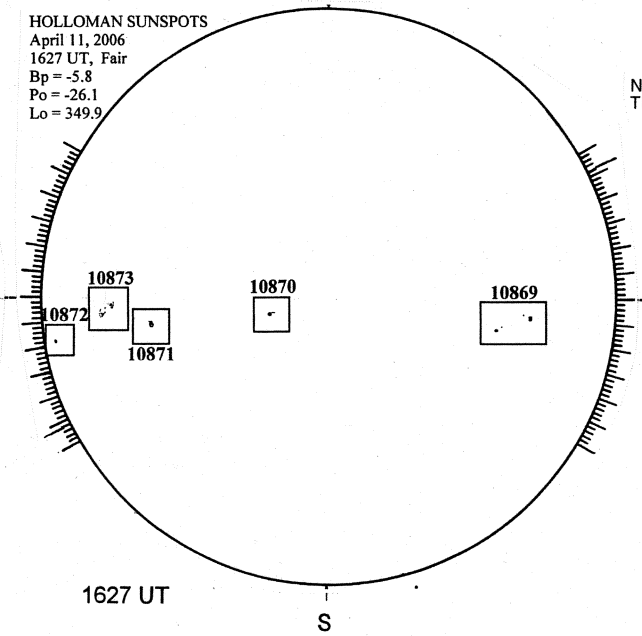

1627 UT
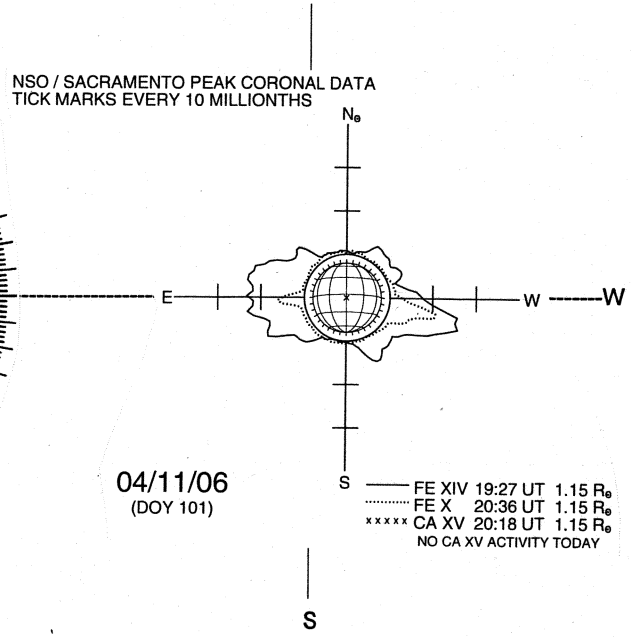
SACRAMENTO PEAK CORONA (1.15 Radii)