APRIL 7, 2006 (P= -26.29, Bo = -6.20, Lo = 51.58)

KITT PEAK MAGNETOGRAM--SOLIS

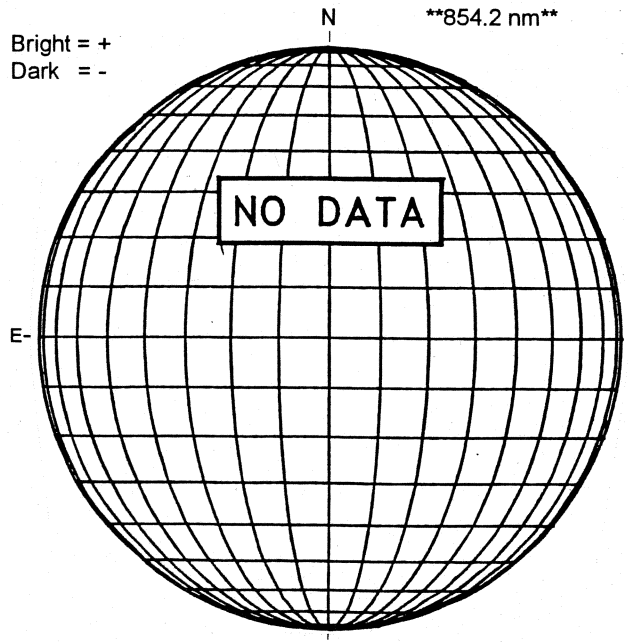

STANFORD MAGNETOGRAM

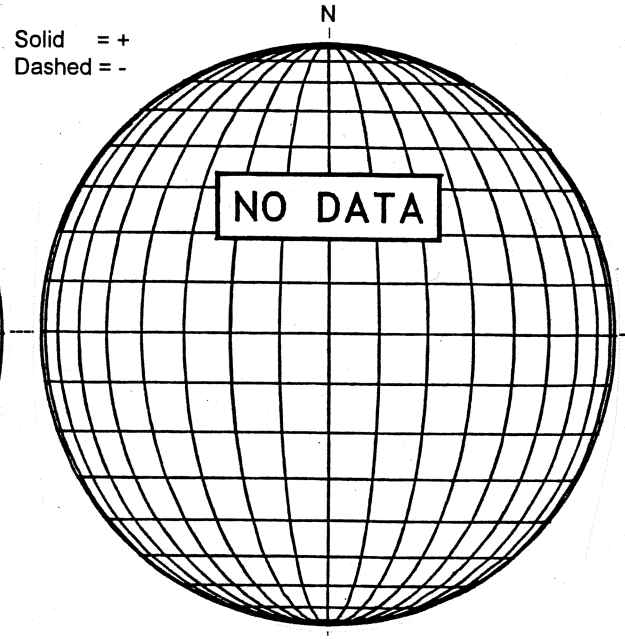

MT. WILSON MAGNETOGRAM

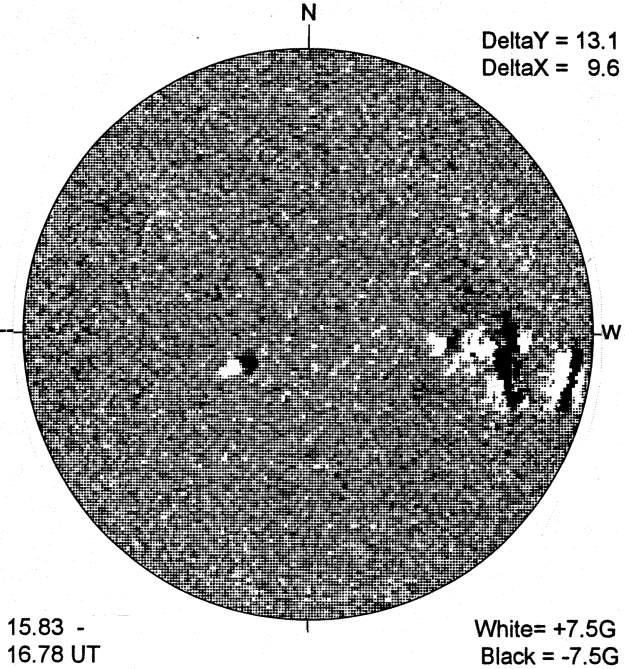

HUAIROU H-ALPHA

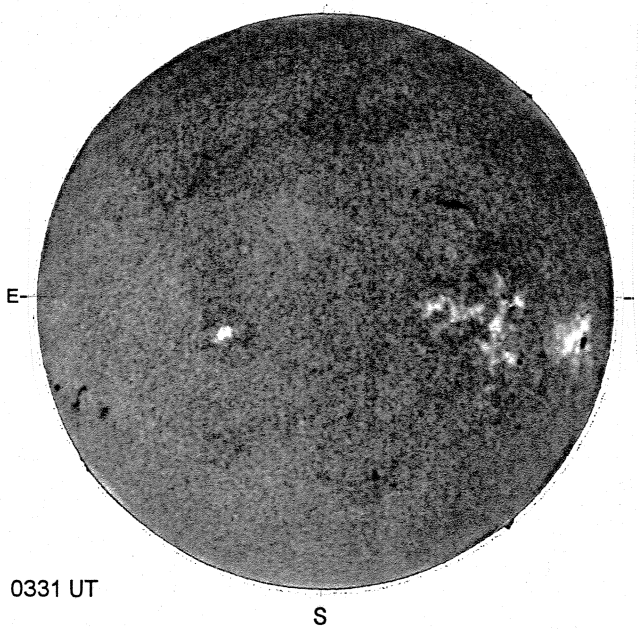

HOLLOMAN SUNSPOTS

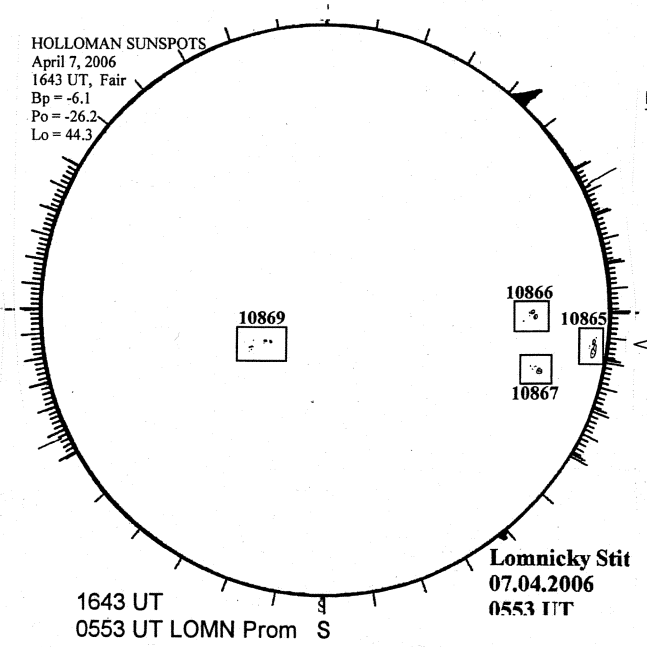
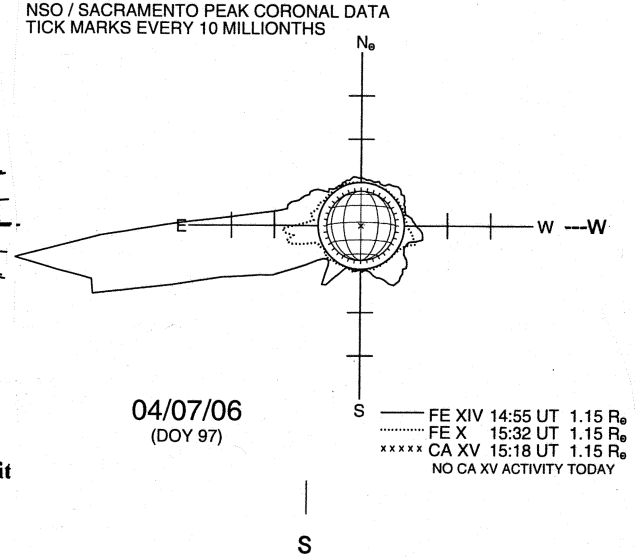
SACRAMENTO PEAK CORONA (1.15 Radii)----