APRIL 6, 2006 (P= -26.28, Bo = -6.26, Lo = 64.78)

KITT PEAK MAGNETOGRAM--SOLIS

854.2 nm

Bright = +
Dark = -

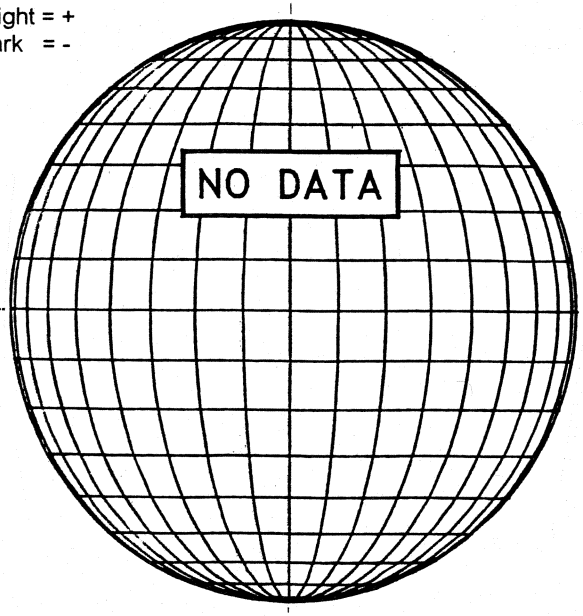

STANFORD MAGNETOGRAM

Solid = +
Dashed = -

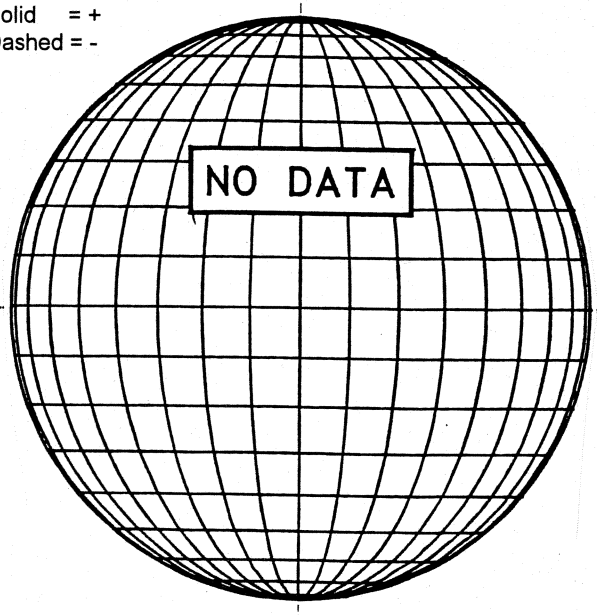

MT. WILSON MAGNETOGRAM

DeltaY = 13.0
DeltaX = 9.6

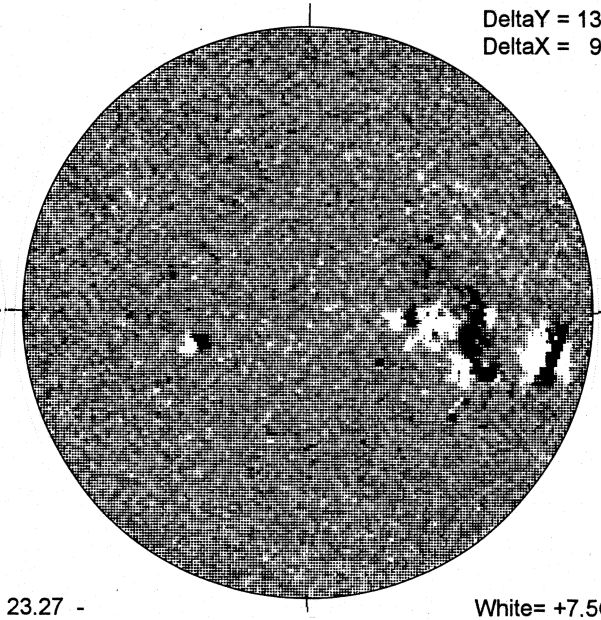

23.27 -
24.22 UT

White= +7.5G
Black = -7.5G

MEUDON H-ALPHA

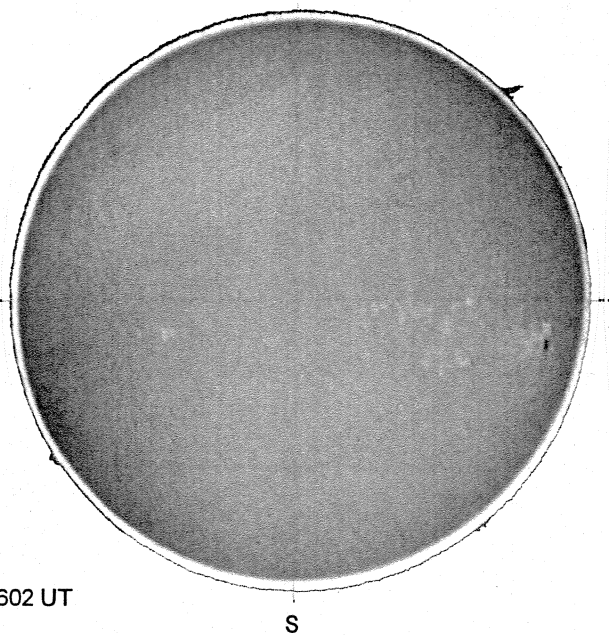

1602 UT

HOLLOMAN SUNSPOTS

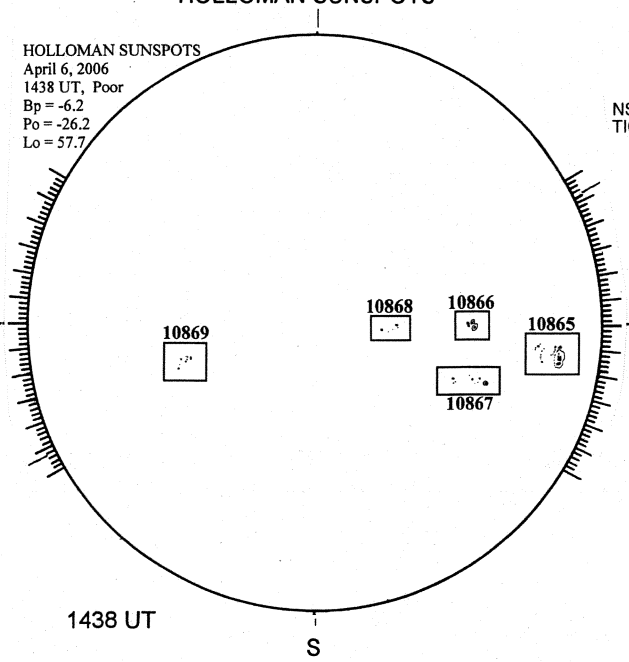

1438 UT

SACRAMENTO PEAK CORONA (1.15 Radii)----

NSO / SACRAMENTO PEAK CORONAL DATA
TICK MARKS EVERY 10 MILLIONTHS

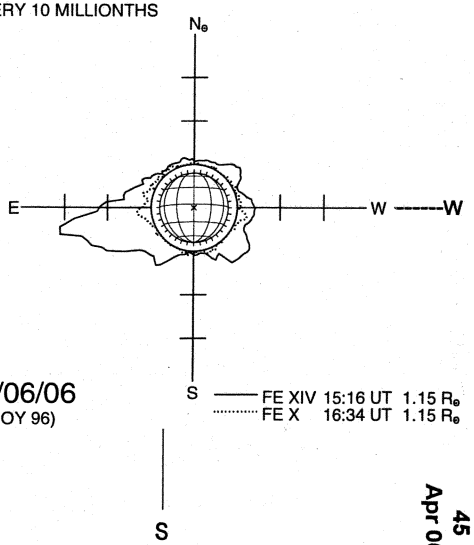

04/06/06
(DOY 96)