MARCH 30, 2006 (P= -26.06, Bo = -6.66, Lo = 157.13)

KITT PEAK MAGNETOGRAM—SOLIS

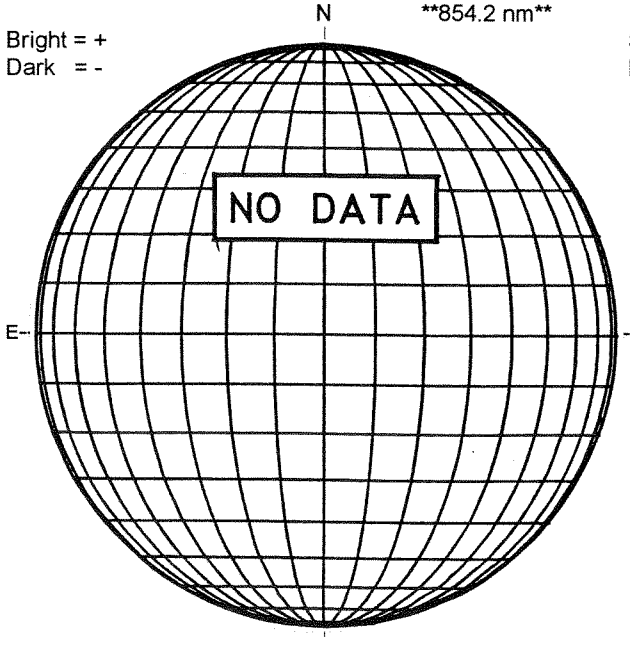

STANFORD MAGNETOGRAM

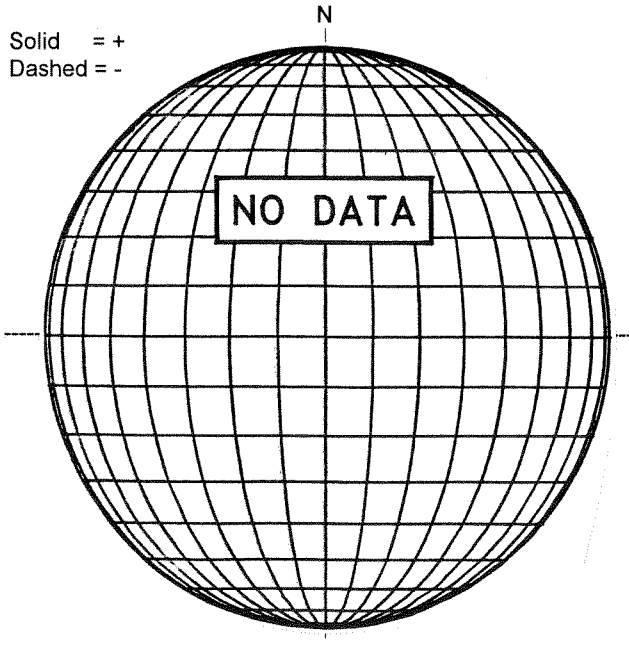

MT. WILSON MAGNETOGRAM

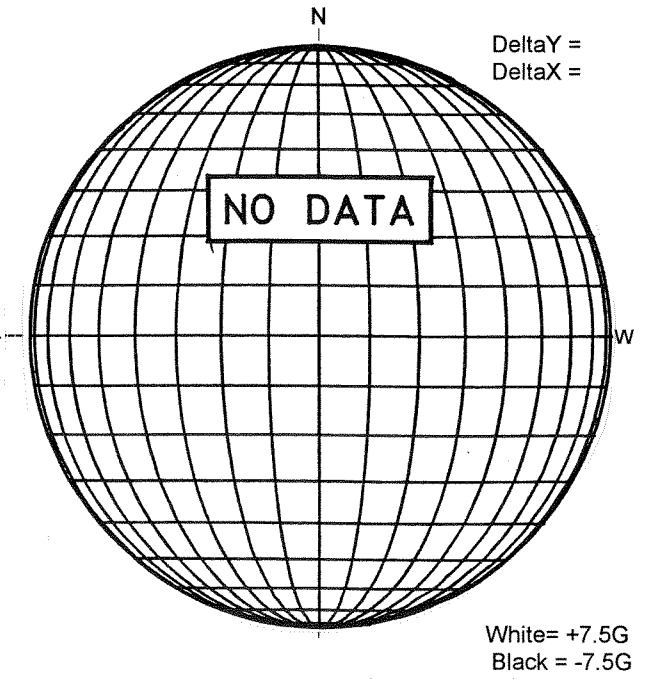

KANZELHOHE H-ALPHA

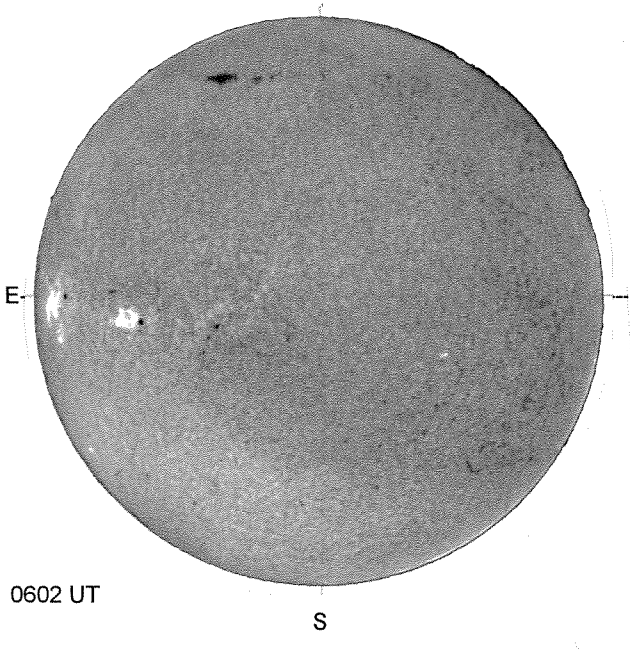

HOLLOMAN SUNSPOTS

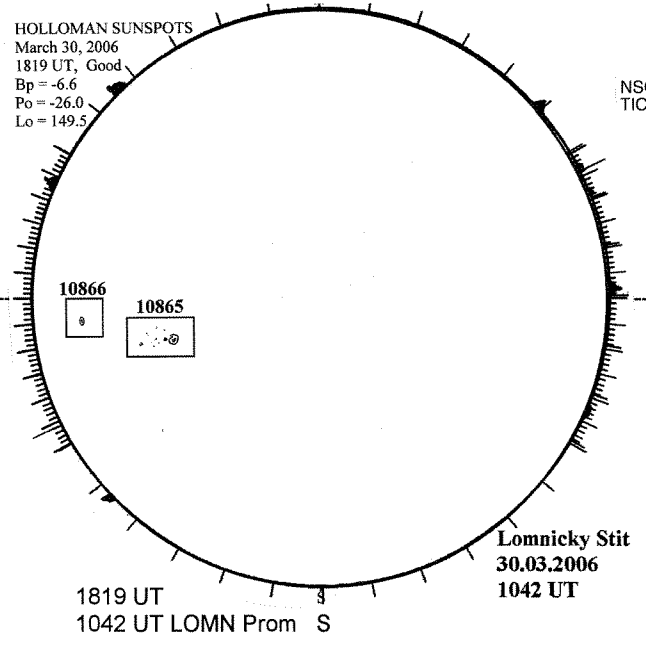
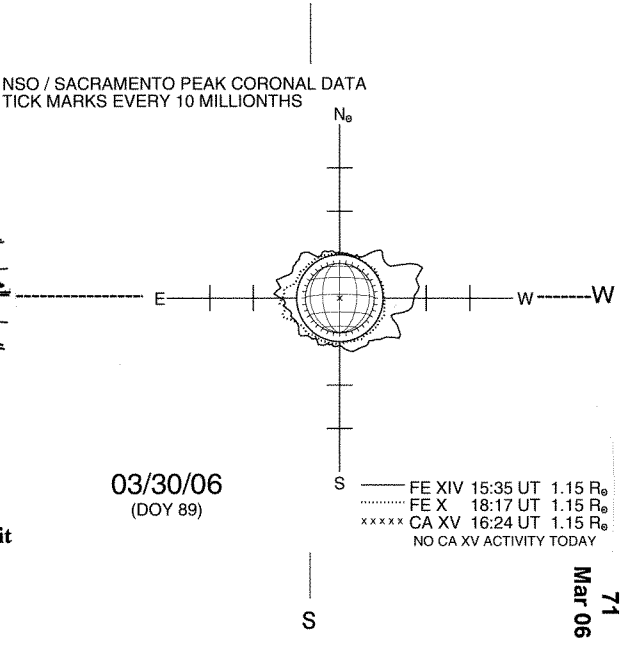
SACRAMENTO PEAK CORONA (1.15 Radii)----