MARCH 27, 2006 (P= -25.85, Bo = -6.80, Lo = 196.70)

KITT PEAK MAGNETOGRAM--SOLIS
854.2 nm

Bright = +
Dark = -

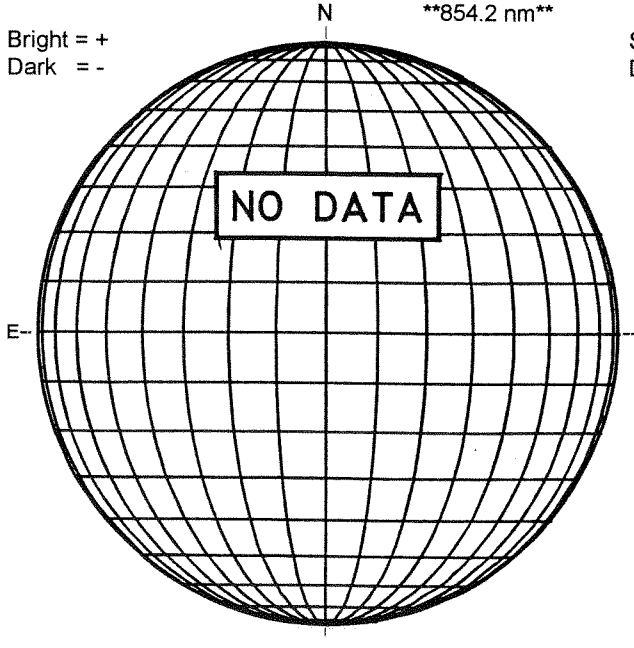

STANFORD MAGNETOGRAM

Solid = +
Dashed = -

1704 UT

MT. WILSON MAGNETOGRAM

DeltaY =
DeltaX =

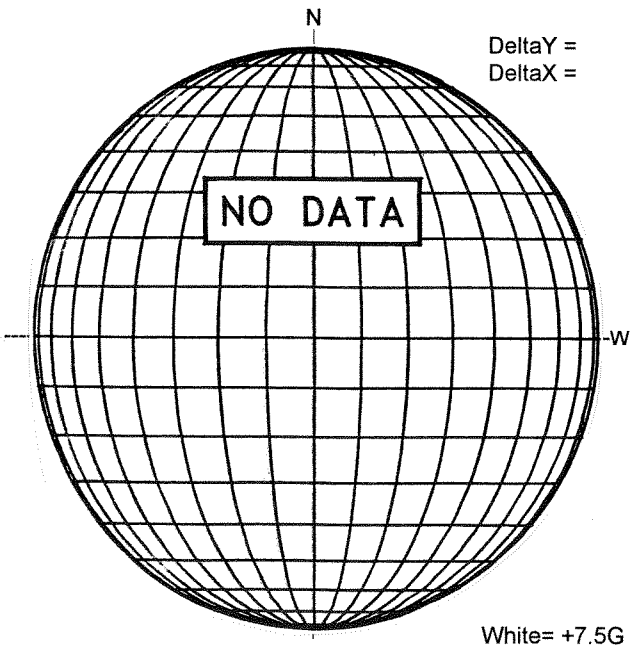

White= +7.5G
Black = -7.5G

----- KANZELHOHE H-ALPHA

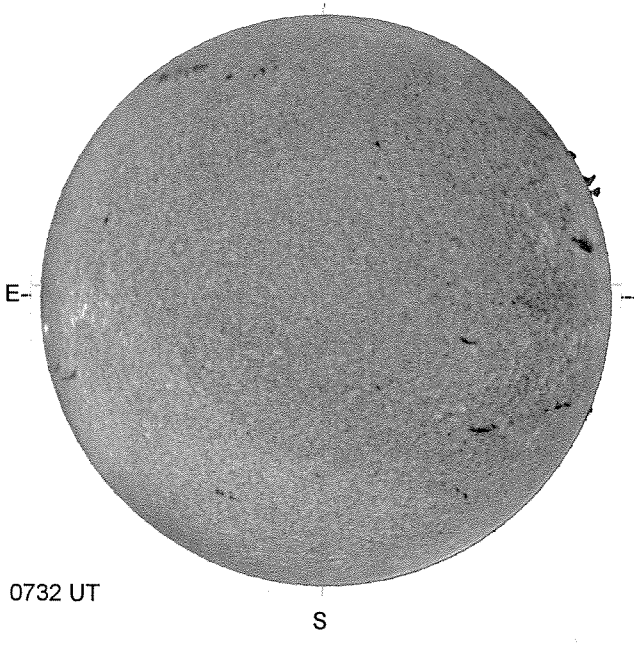

0732 UT

SAN VITO SUNSPOTS

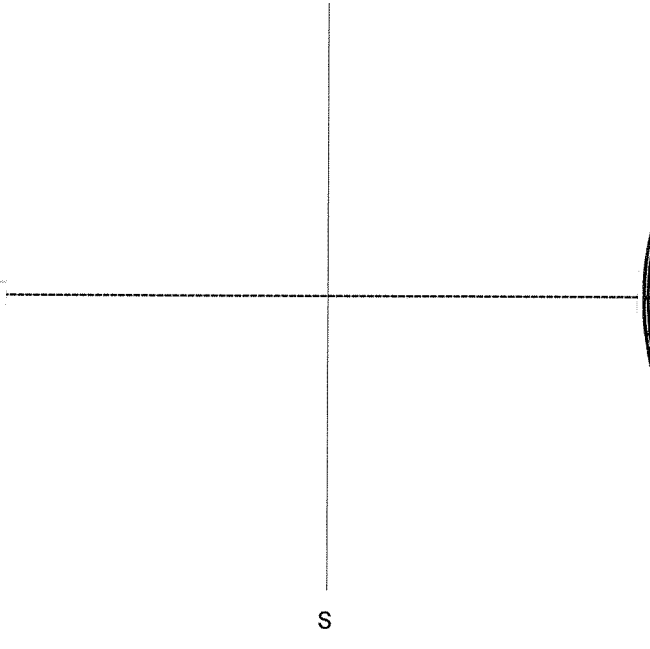
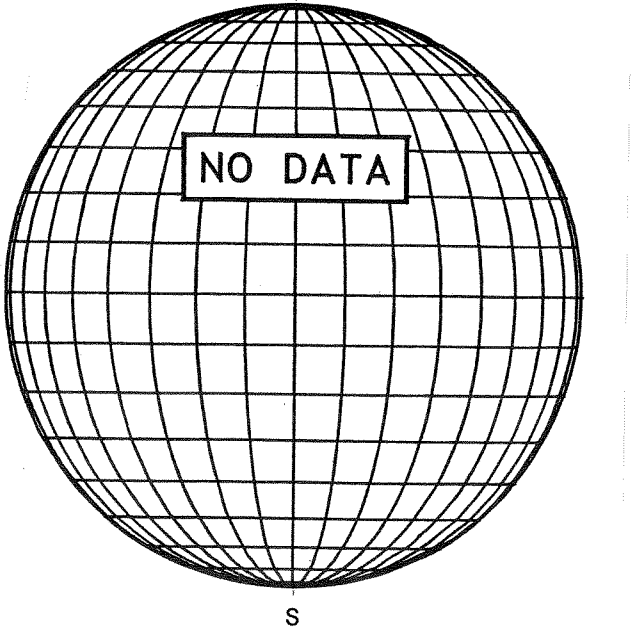
SACRAMENTO PEAK CORONA (1.15 Radii)----