MARCH 24, 2006 (P= -25.58, Bo = -6.92, Lo = 236.26)

KITT PEAK MAGNETOGRAM--SOLIS

Bright = +
Dark = -

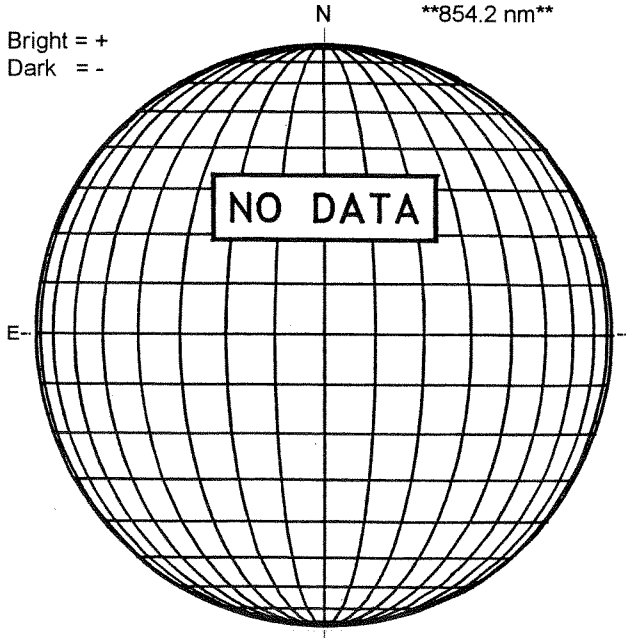

STANFORD MAGNETOGRAM

Solid = +
Dashed = -

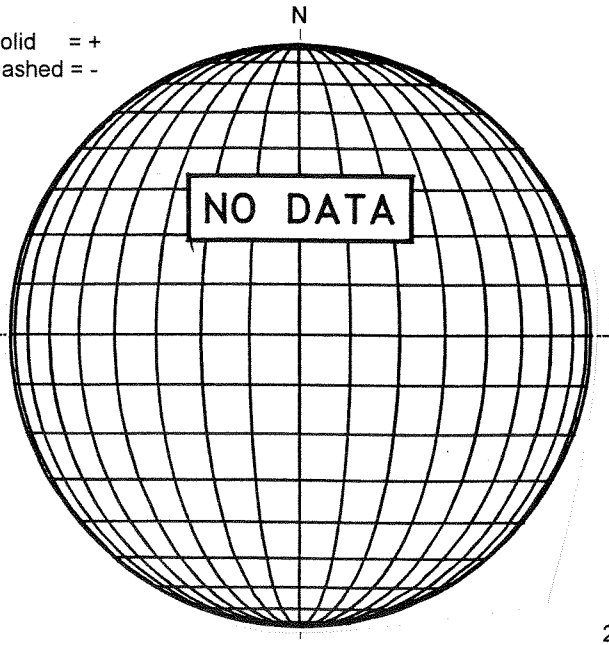

MT. WILSON MAGNETOGRAM

DeltaY = 20.1
DeltaX = 12.9

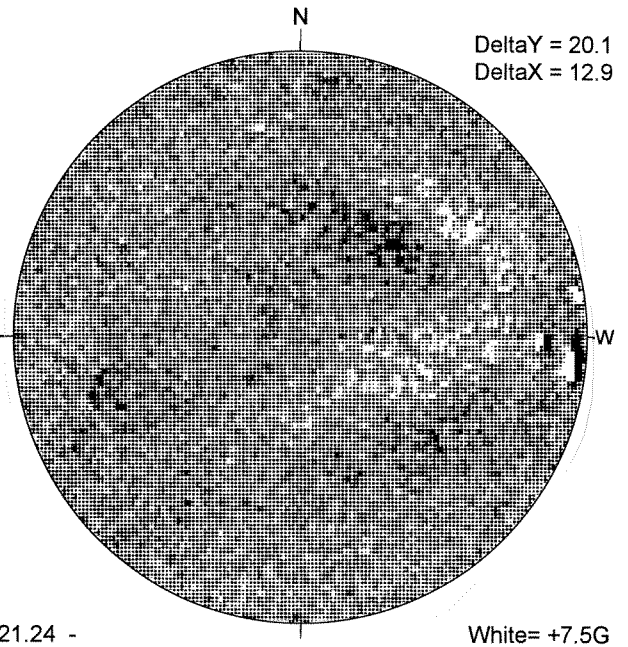

21.24 -
21.66 UT

White= +7.5G
Black = -7.5G

KANZELHOHE H-ALPHA

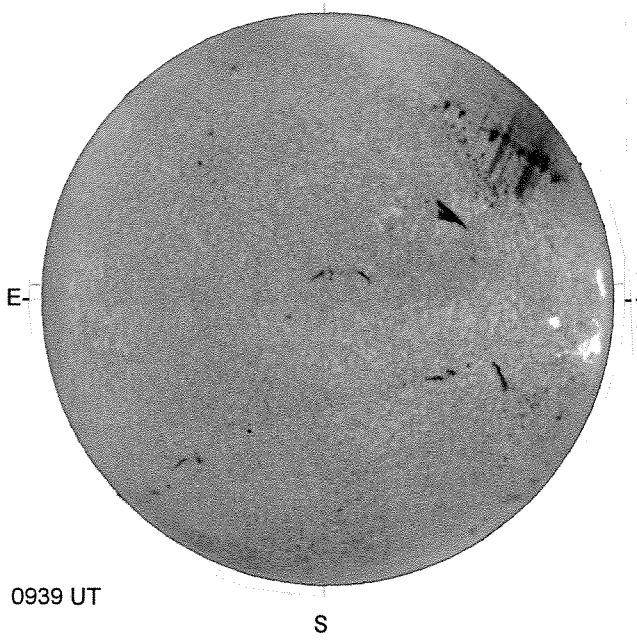

0939 UT

HOLLOMAN SUNSPOTS

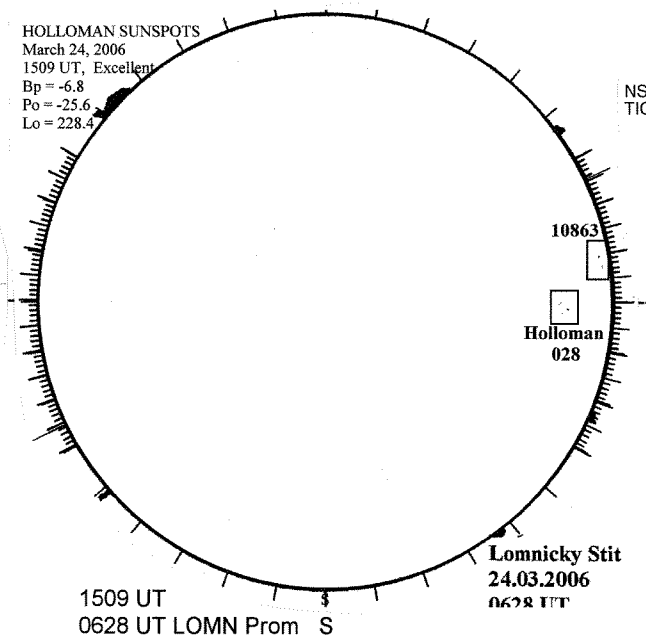

1509 UT
0628 UT LOMN Prom

SACRAMENTO PEAK CORONA (1.15 Radii)----

NSO / SACRAMENTO PEAK CORONAL DATA
TICK MARKS EVERY 10 MILLIONTHS

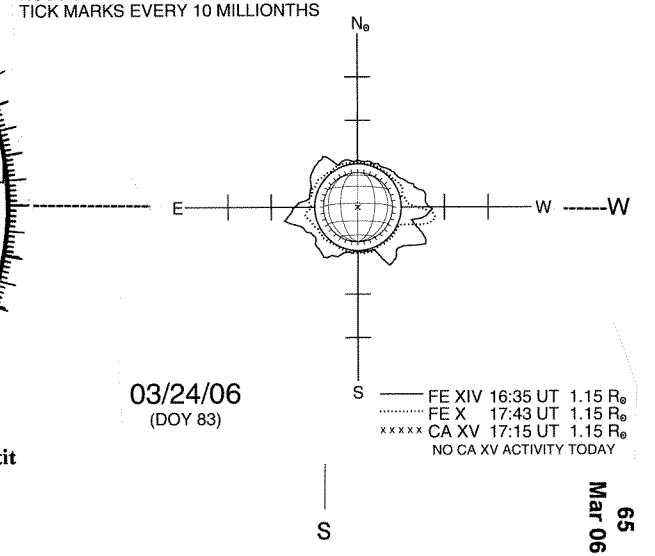

03/24/06
(DOY 83)

S