MARCH 23, 2006 (P= -25.48, Bo = -6.96, Lo = 249.45)

KITT PEAK MAGNETOGRAM--SOLIS

854.2 nm

Bright = +
Dark = -

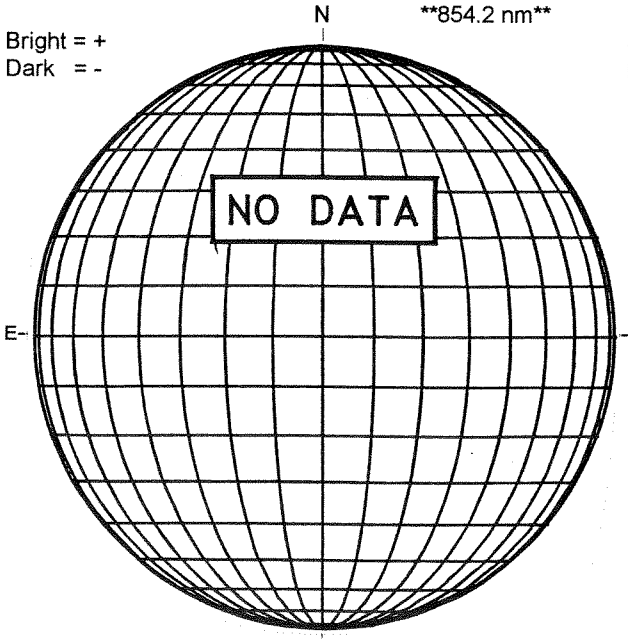

STANFORD MAGNETOGRAM

Solid = +
Dashed = -

1732 UT

MT. WILSON MAGNETOGRAM

DeltaY = 13.0
DeltaX = 9.6

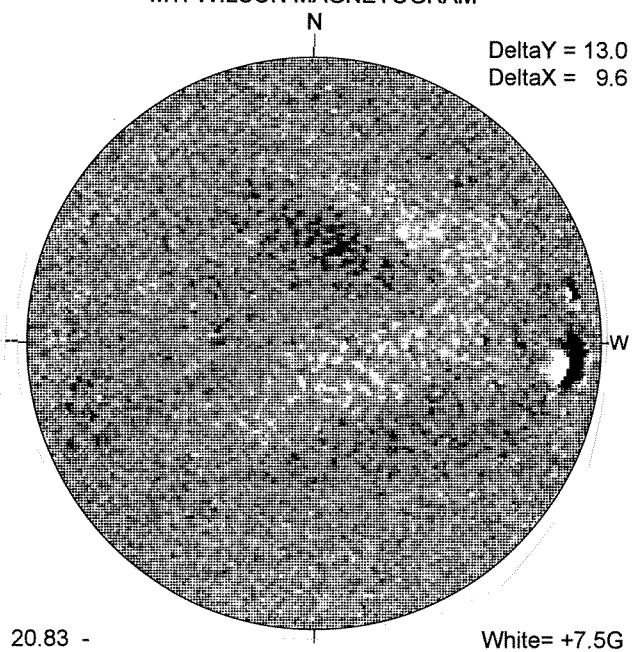

20.83 -
21.79 UT

White= +7.5G
Black = -7.5G

HUAIROU H-ALPHA

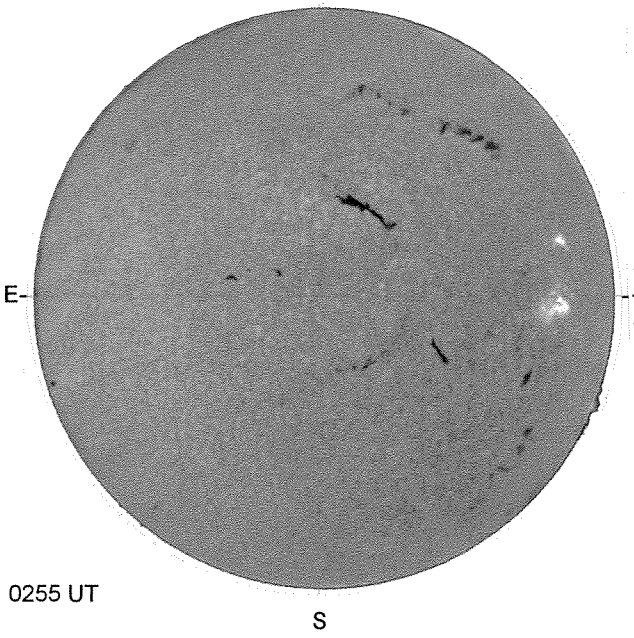

0255 UT

HOLLOMAN SUNSPOTS

HOLLOMAN SUNSPOTS
March 23, 2006
1533 UT, Good
Bp = -6.9
Po = -25.5
Lo = 242.2

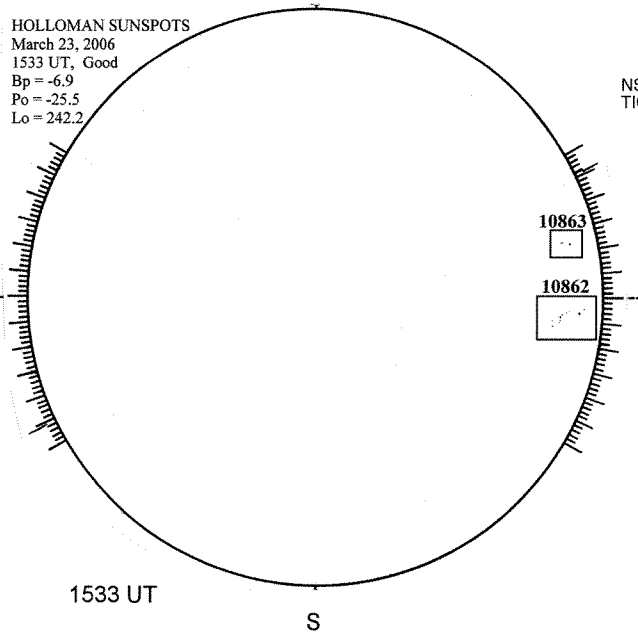

1533 UT

SACRAMENTO PEAK CORONA (1.15 Radii)

NSO / SACRAMENTO PEAK CORONAL DATA
TICK MARKS EVERY 10 MILLIONTHS

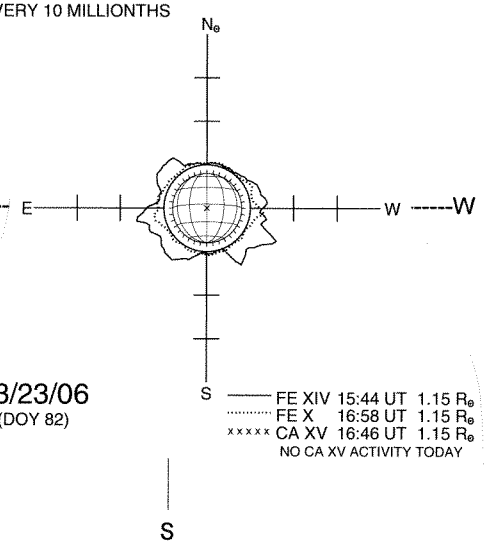

03/23/06
(DOY 82)

FE XIV 15:44 UT 1.15 Re
FE X 16:58 UT 1.15 Re
CA XV 16:46 UT 1.15 Re
NO CA XV ACTIVITY TODAY