MARCH 21, 2006 (P= -25.25, Bo = -7.02, Lo = 275.81)

KITT PEAK MAGNETOGRAM--SOLIS

Bright = +
Dark = -

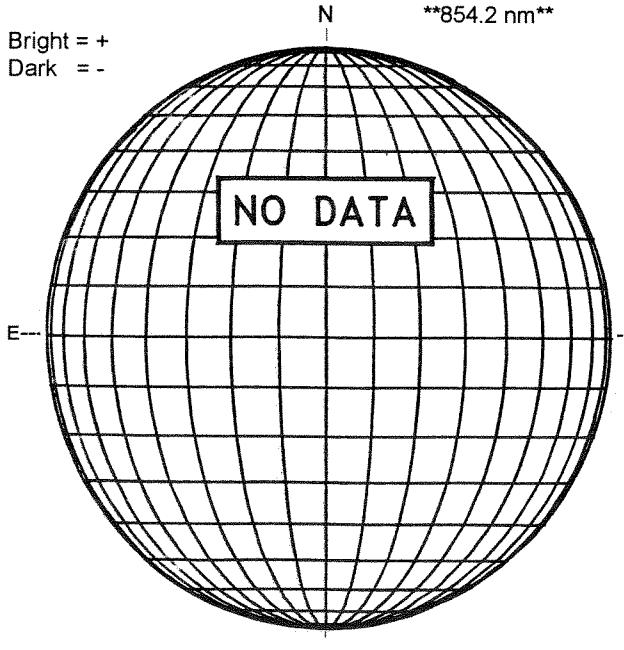

STANFORD MAGNETOGRAM

Solid = +
Dashed = -

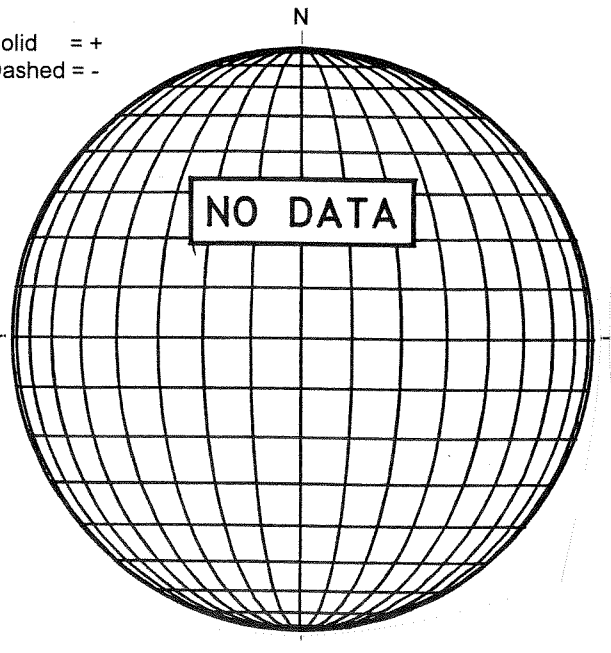

MT. WILSON MAGNETOGRAM

DeltaY =
DeltaX =

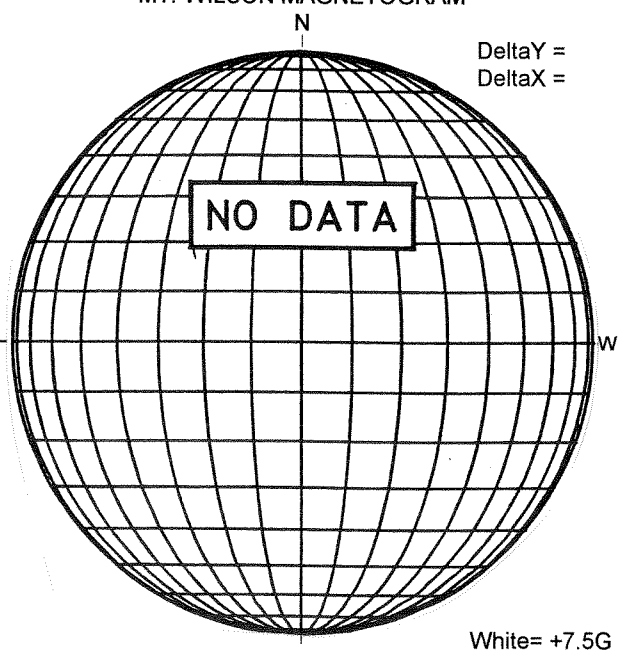

White= +7.5G
Black = -7.5G

KANZELHOHE H-ALPHA

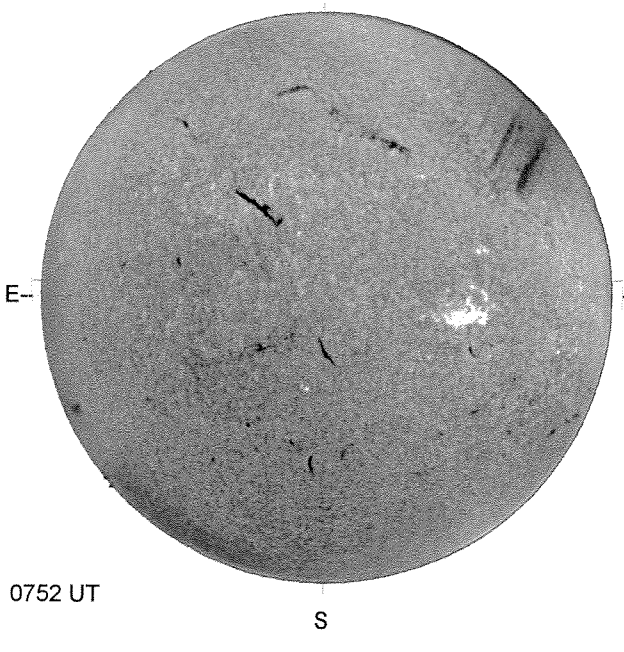

0752 UT

ISOON/OSPaN SUNSPOTS

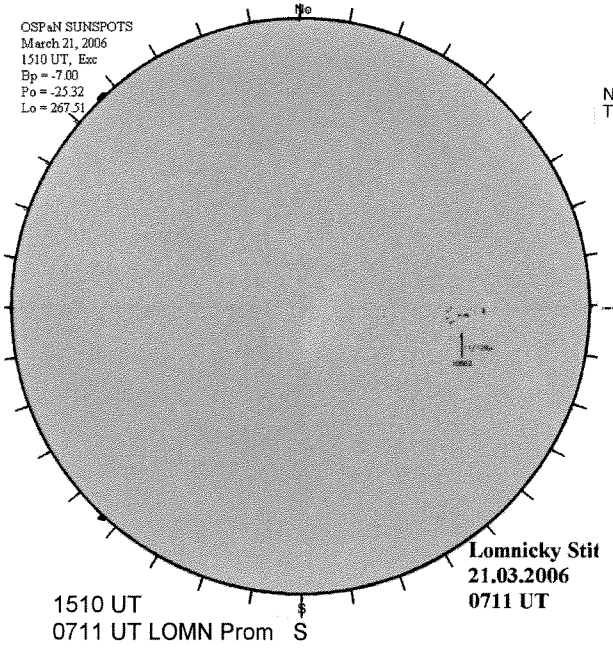

1510 UT
0711 UT LOMN Prom S

LOMNICKY PEAK CORONA (1.04 Radii)----

NSO / SACRAMENTO PEAK CORONAL DATA
TICK MARKS EVERY 10 MILLIONTHS

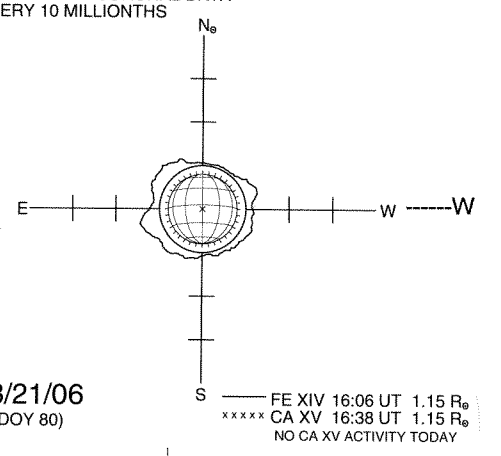

03/21/06
(DOY 80)

—— FE XIV 16:06 UT 1.15 $R_\odot$
xxxxx CA XV 16:38 UT 1.15 $R_\odot$
NO CA XV ACTIVITY TODAY

S