MARCH 14, 2006 (P= -24.24, Bo = -7.19, Lo = 8.09)

KITT PEAK MAGNETOGRAM--SOLIS

Bright = +
Dark = -

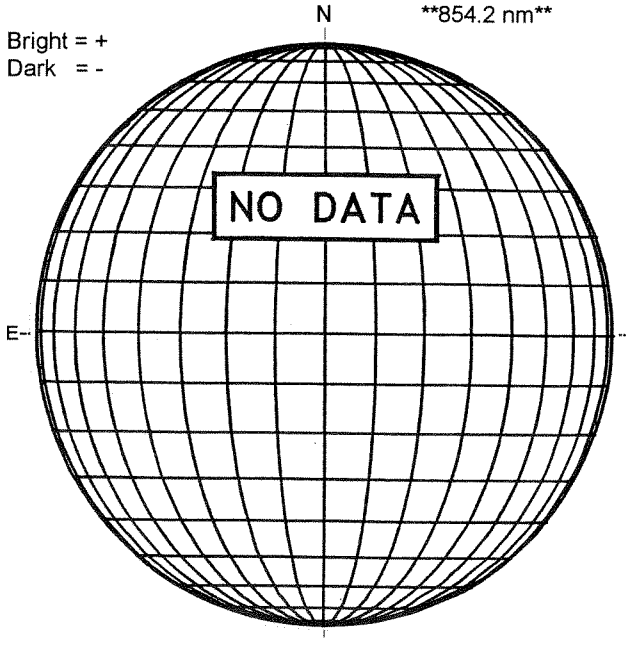

STANFORD MAGNETOGRAM

Solid = +
Dashed = -

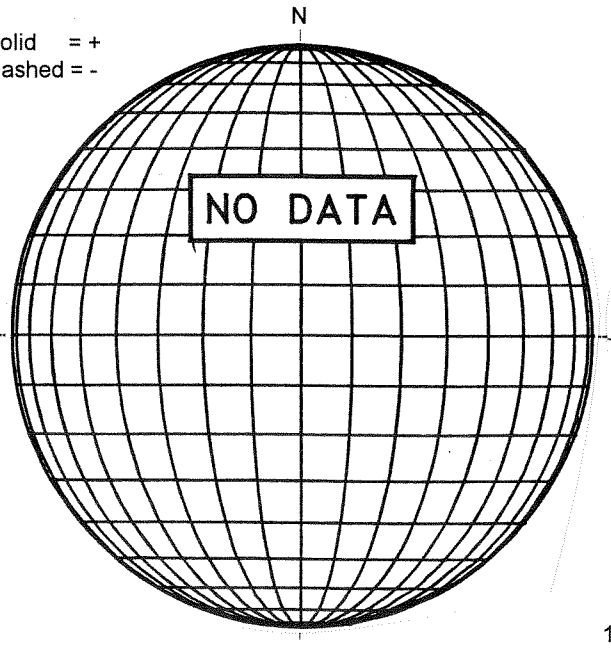

MT. WILSON MAGNETOGRAM

DeltaY = 13.0
DeltaX = 9.6

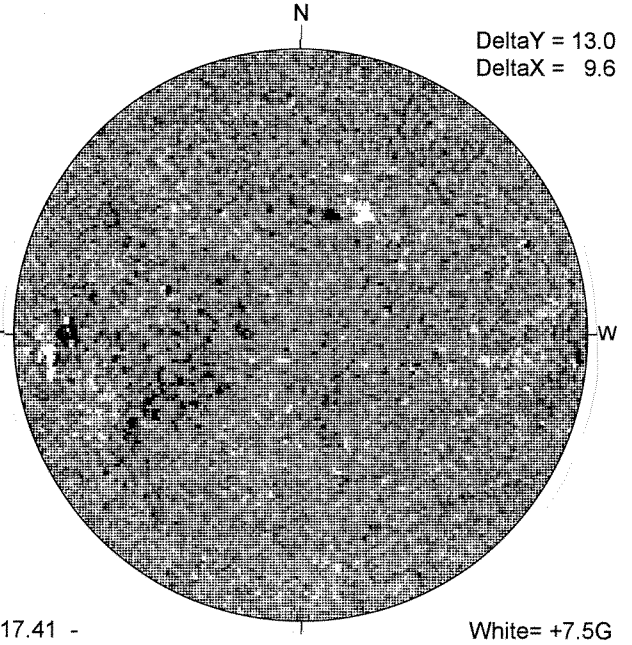

17.41 -
18.37 UT

White= +7.5G
Black = -7.5G

CATANIA H-ALPHA

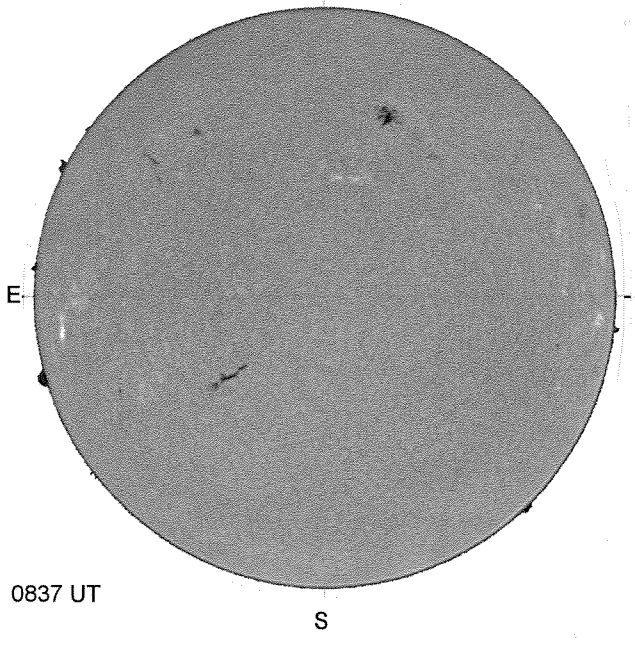

0837 UT

HOLLOMAN SUNSPOTS

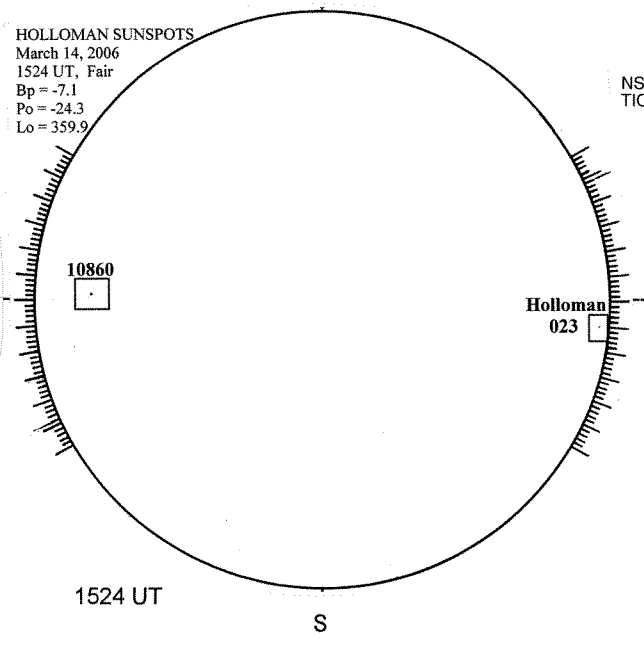

1524 UT
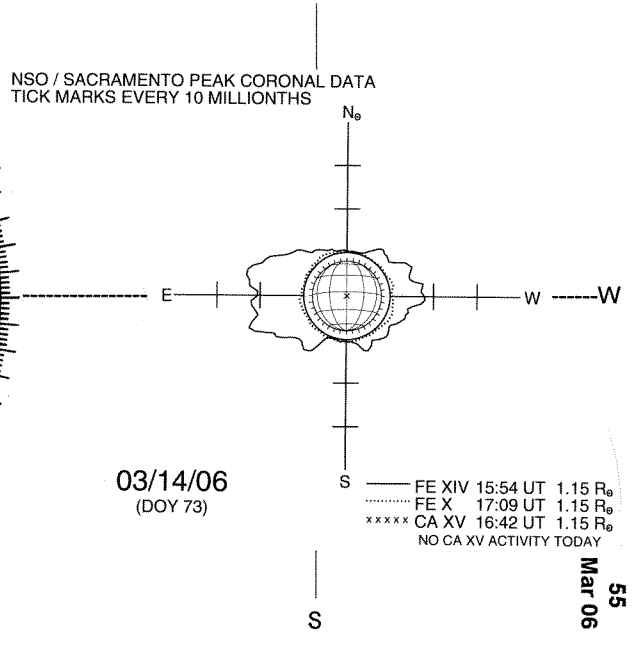
SACRAMENTO PEAK CORONA (1.15 Radii)----