MARCH 10, 2006 (P= -23.51, Bo = -7.24 Lo = 60.80)

KITT PEAK MAGNETOGRAM--SOLIS

Bright = +
Dark = -

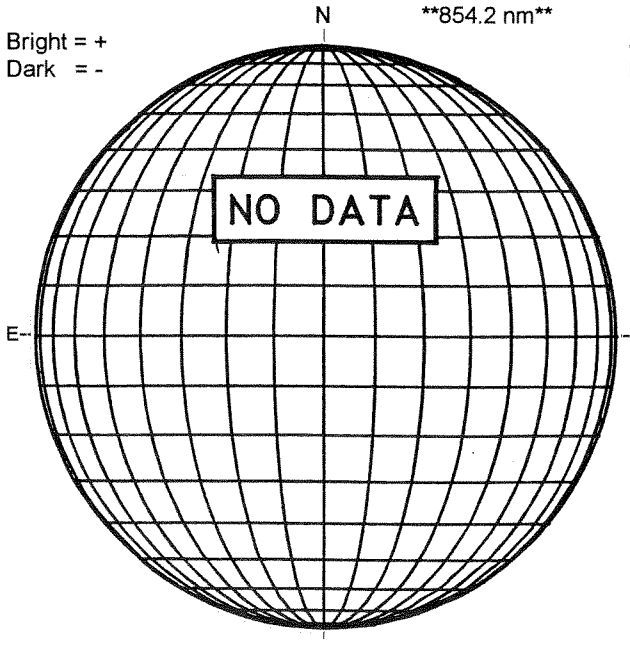

STANFORD MAGNETOGRAM

Solid = +
Dashed = -

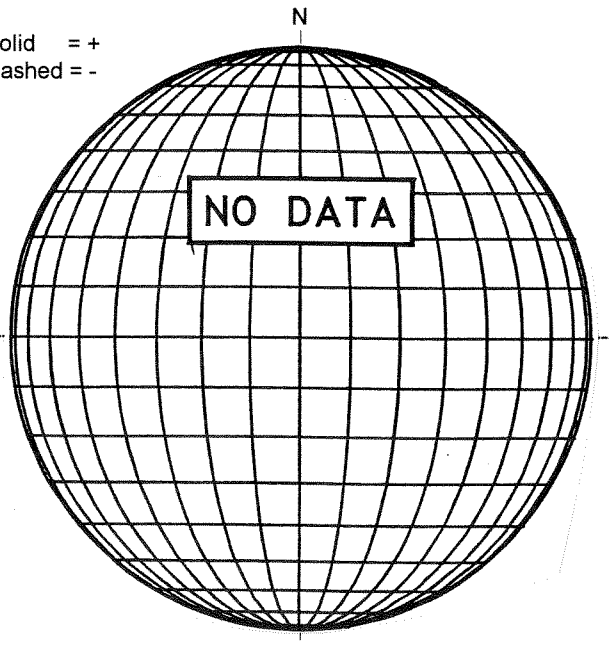

MT. WILSON MAGNETOGRAM

DeltaY =
DeltaX =

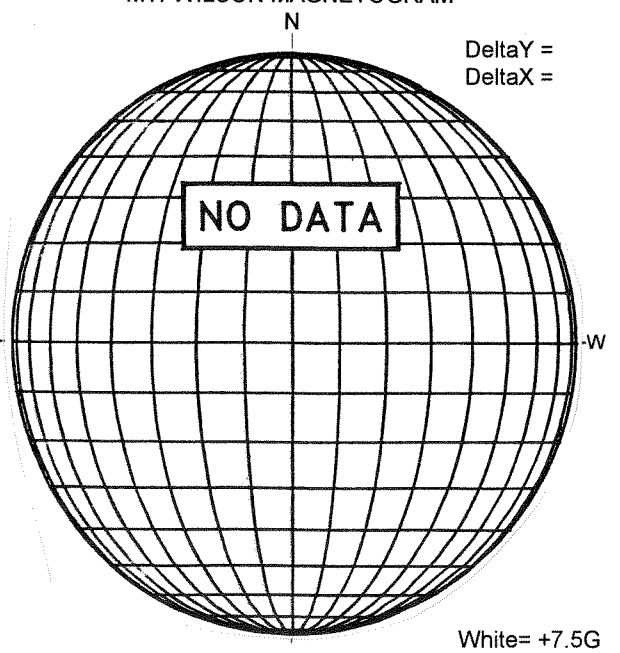

White= +7.5G
Black = -7.5G

MEUDON H-ALPHA

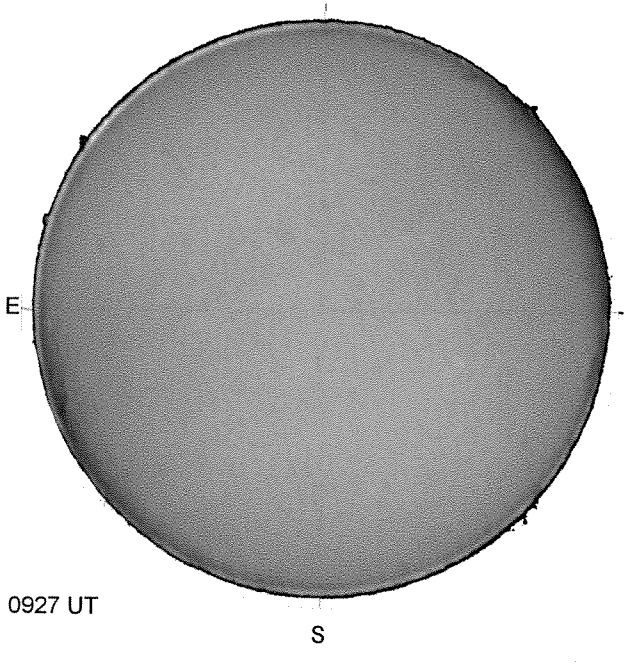

0927 UT

SAN VITO SUNSPOTS

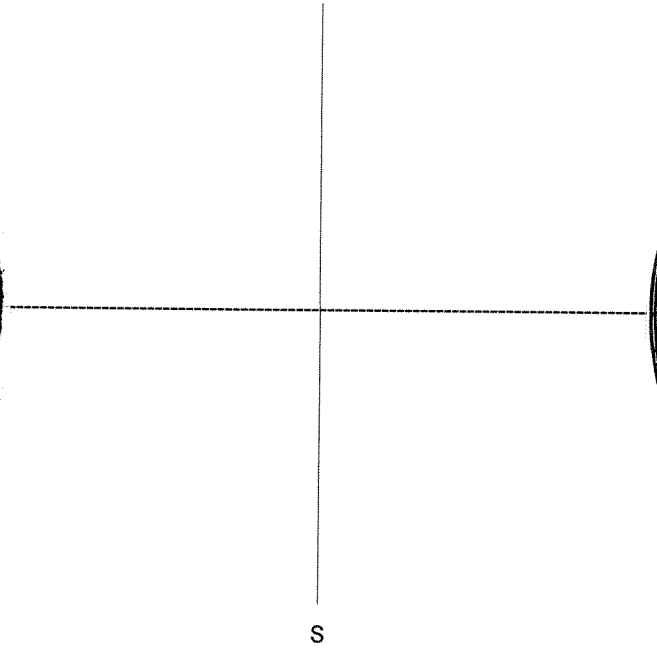
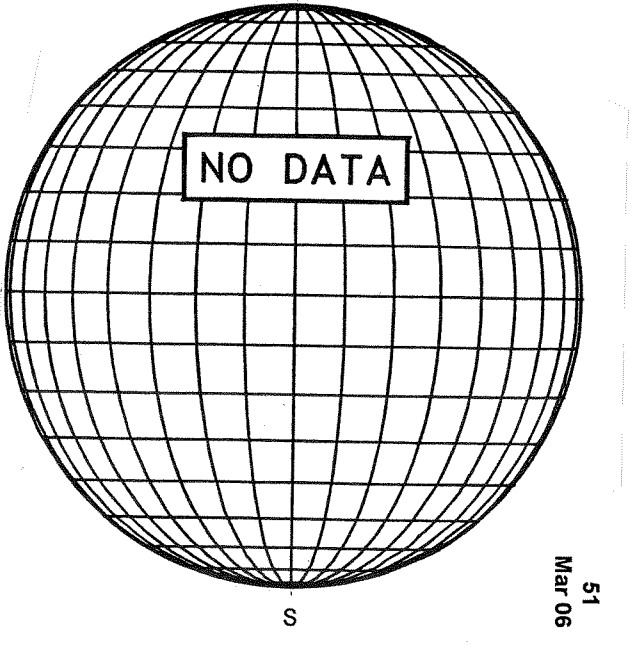
SACRAMENTO PEAK CORONA (1.15 Radii)----