FEBRUARY 27, 2006 (P= -20.97, Bo = -7.19, Lo = 205.72)

KITT PEAK MAGNETOGRAM--SOLIS

854.2 nm

Bright = +
Dark = -

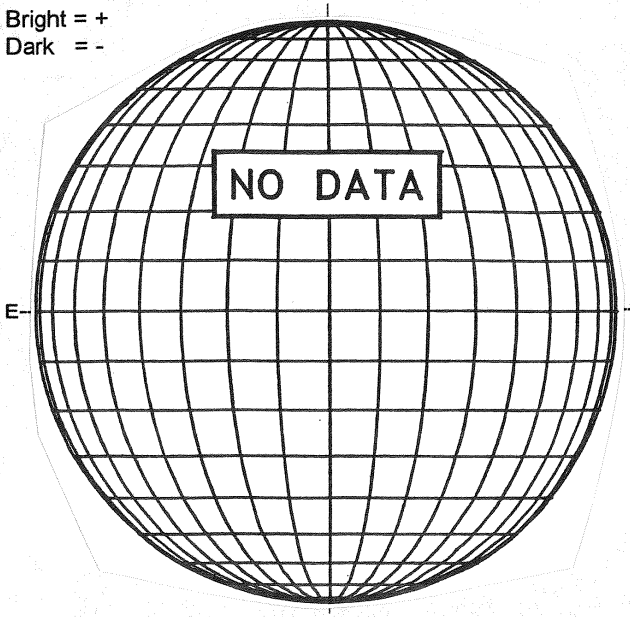

STANFORD MAGNETOGRAM

Solid = +
Dashed = -

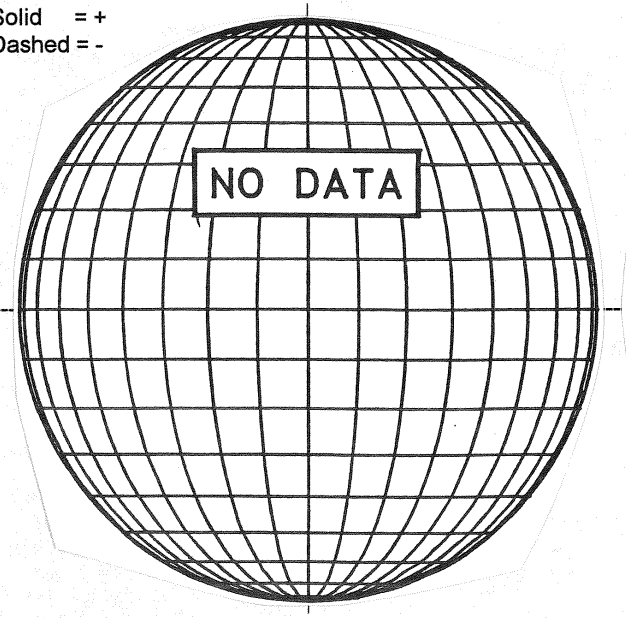

MT. WILSON MAGNETOGRAM

DeltaY =
DeltaX =

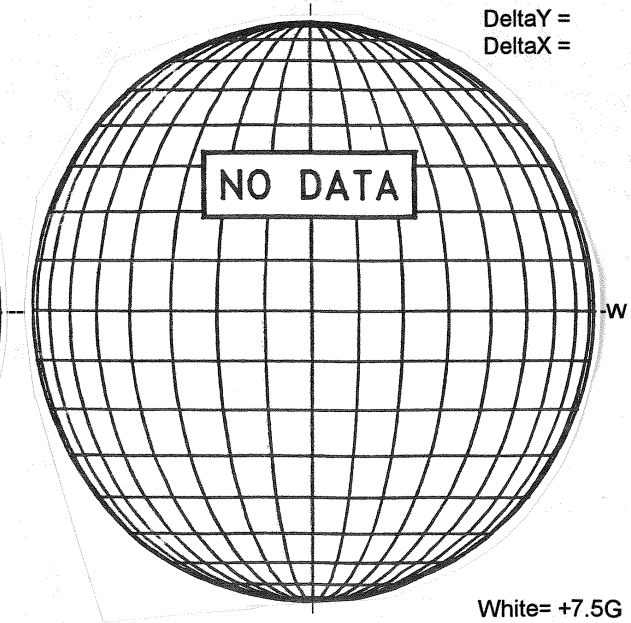

White= +7.5G
Black = -7.5G

KANZELHOHE H-ALPHA

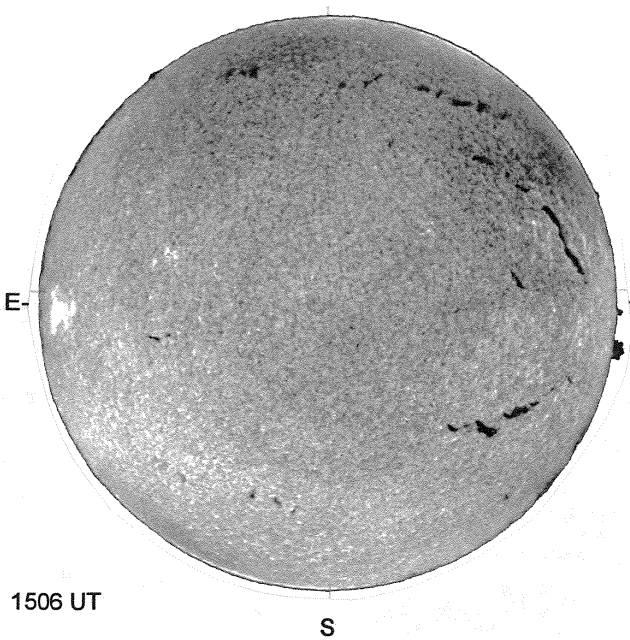

1506 UT

ISOON/OSPaN SUNSPOTS

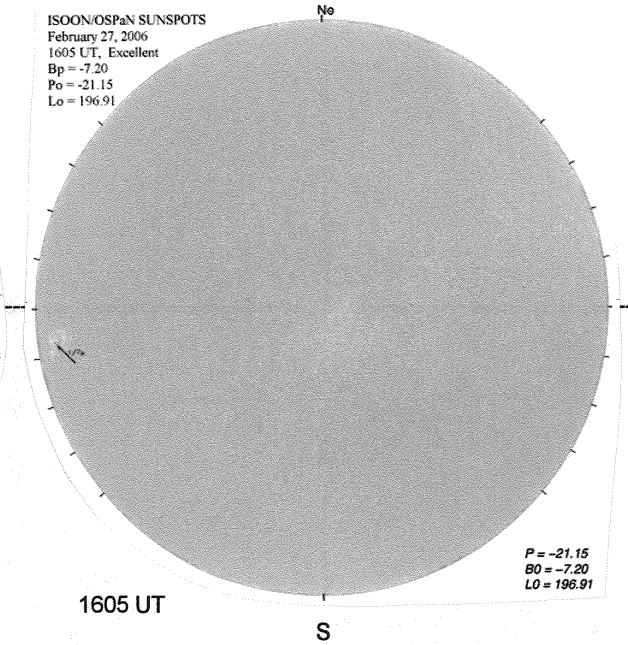

1605 UT
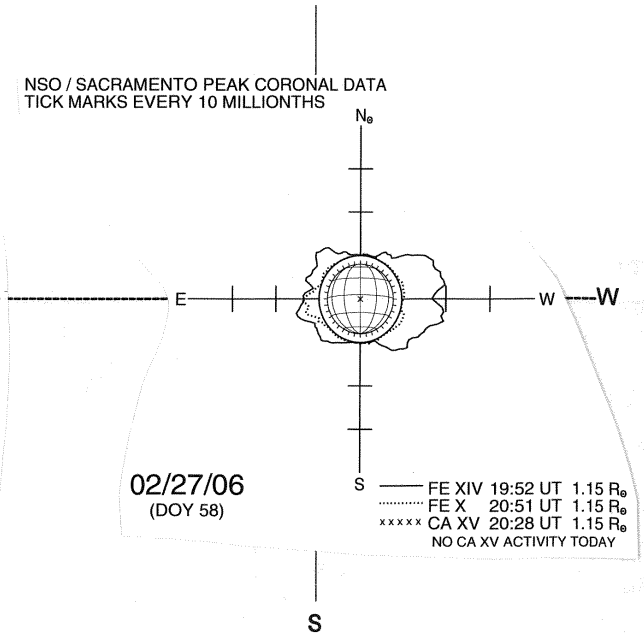
SACRAMENTO PEAK CORONA (1.15 Radii)