FEBRUARY 16, 2006 (P= -17.69, Bo = -6.87, Lo = 350.58)

KITT PEAK MAGNETOGRAM--SOLIS

854.2 nm

Bright = +
Dark = -

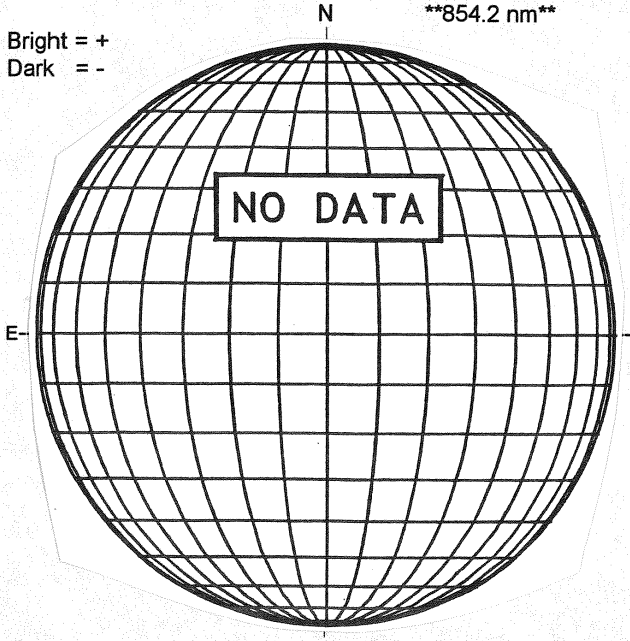

STANFORD MAGNETOGRAM

Solid = +
Dashed = -

1804 UT

MT. WILSON MAGNETOGRAM

DeltaY = 19.9
DeltaX = 13.0

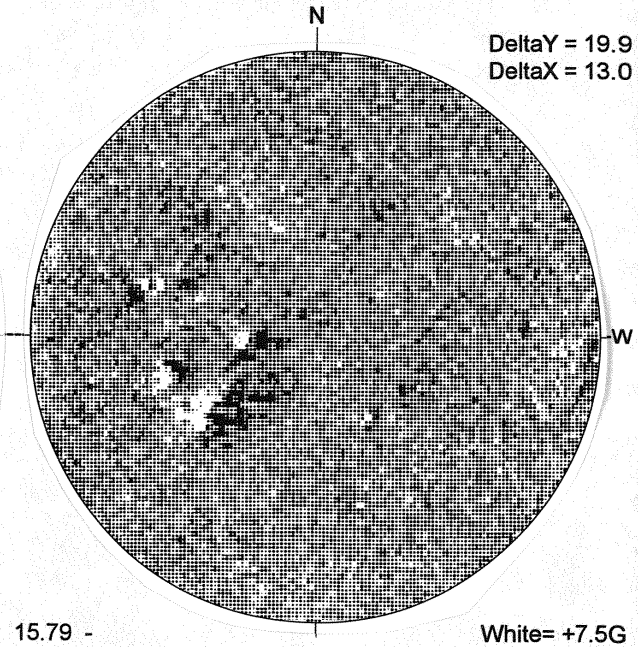

15.79 -
16.22 UT

White= +7.5G
Black = -7.5G

CATANIA H-ALPHA

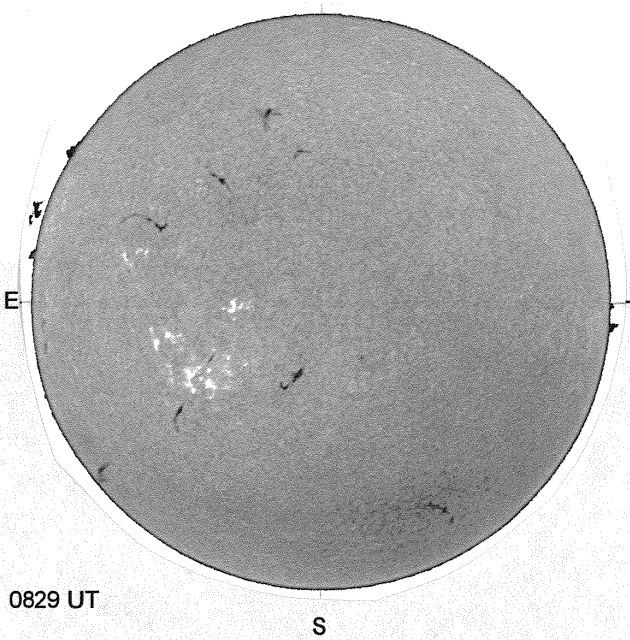

0829 UT

ISOON/OSPaN SUNSPOTS

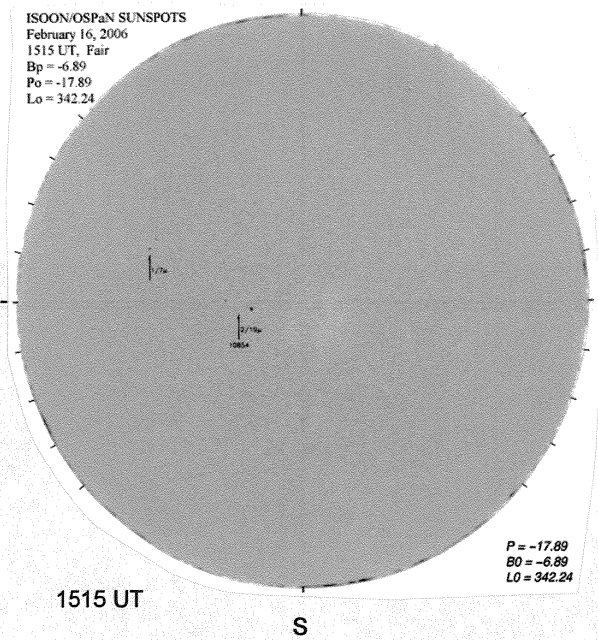

1515 UT

SACRAMENTO PEAK CORONA (1.15 Radii)----

NSO / SACRAMENTO PEAK CORONAL DATA
TICK MARKS EVERY 10 MILLIONTHS

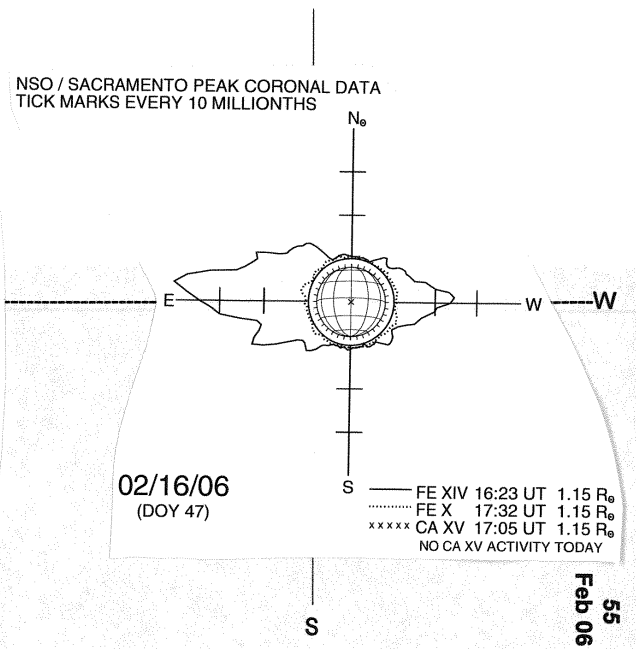

02/16/06
(DOY 47)

FE XIV 16:23 UT 1.15 $R_\odot$
FE X 17:32 UT 1.15 $R_\odot$
CA XV 17:05 UT 1.15 $R_\odot$
NO CA XV ACTIVITY TODAY