FEBRUARY 15, 2006 (P= -17.35, Bo = -6.83, Lo = 3.75)

KITT PEAK MAGNETOGRAM--SOLIS

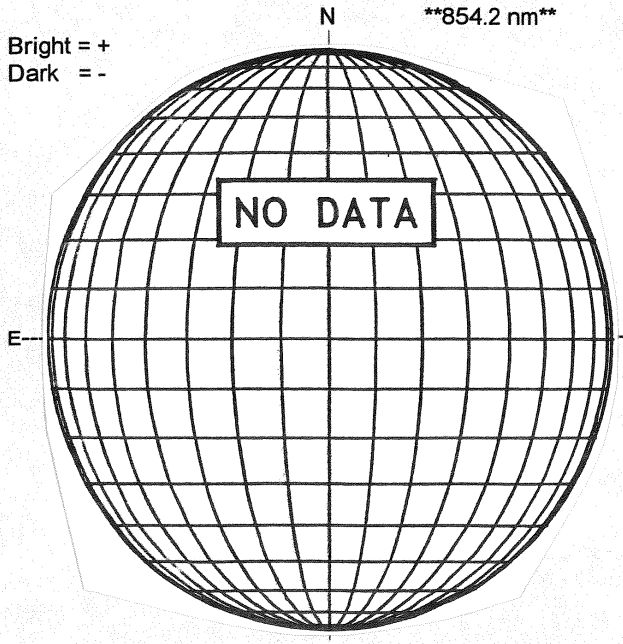

STANFORD MAGNETOGRAM

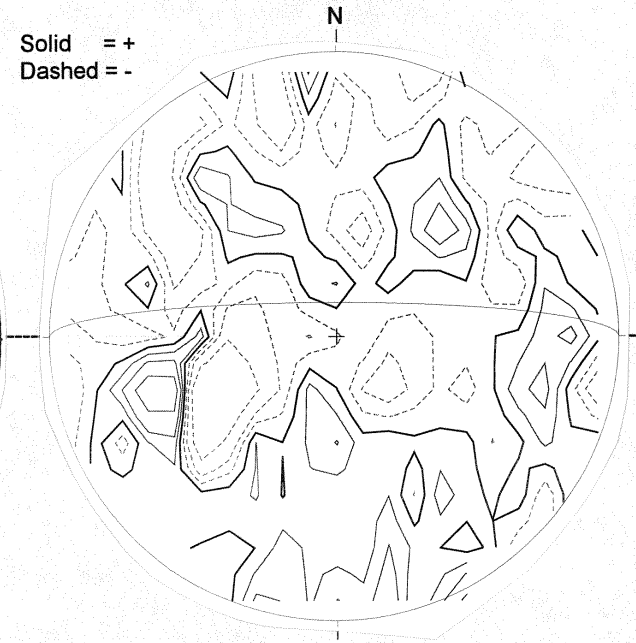

MT. WILSON MAGNETOGRAM

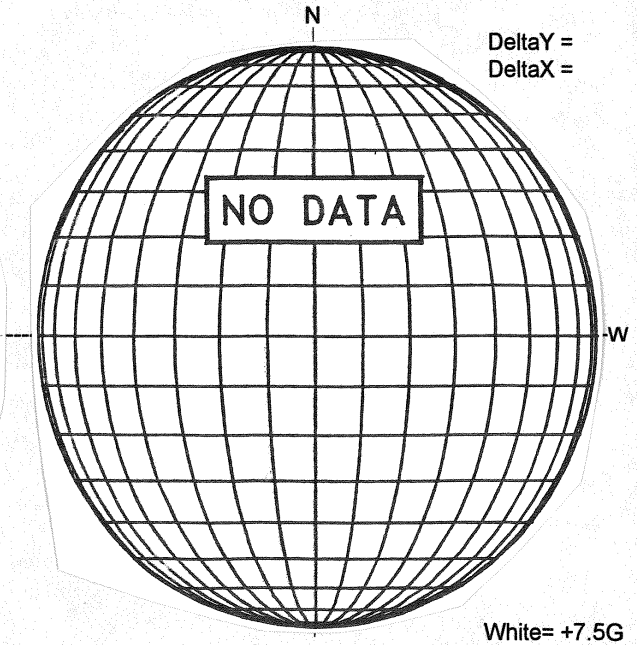

KANZELHOHE H-ALPHA

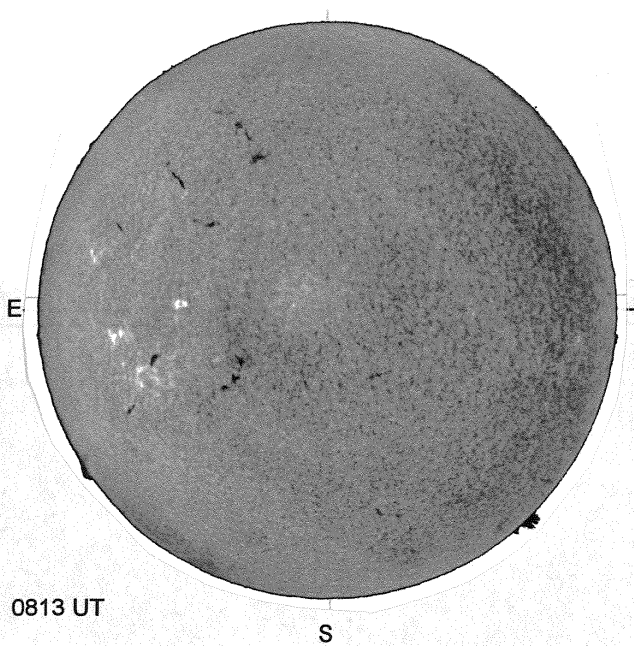

ISOON/OSPaN SUNSPOTS

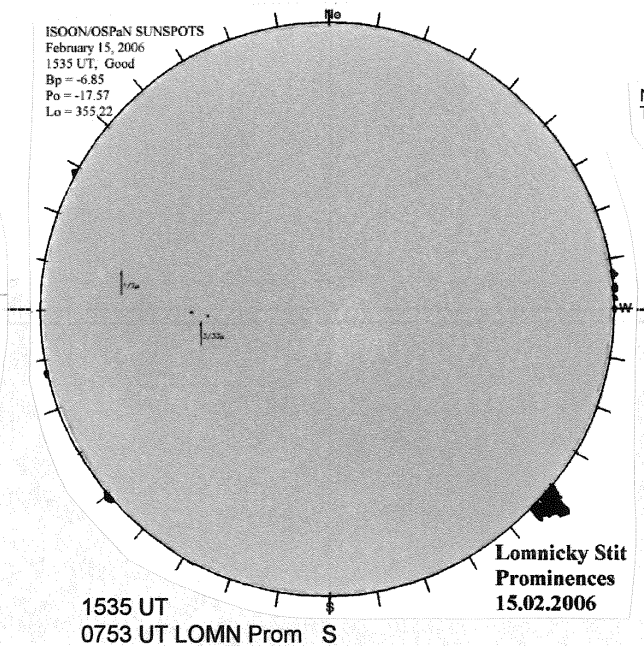
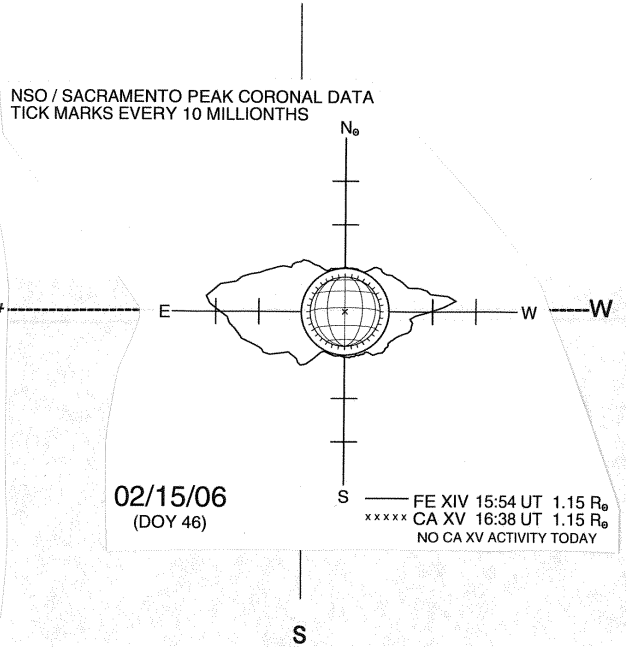
SACRAMENTO PEAK CORONA (1.15 Radii)