FEBRUARY 13, 2006 (P= -16.67, Bo = -6.74, Lo = 30.09)

KITT PEAK MAGNETOGRAM--SOLIS

854.2 nm

Bright = +
Dark = -

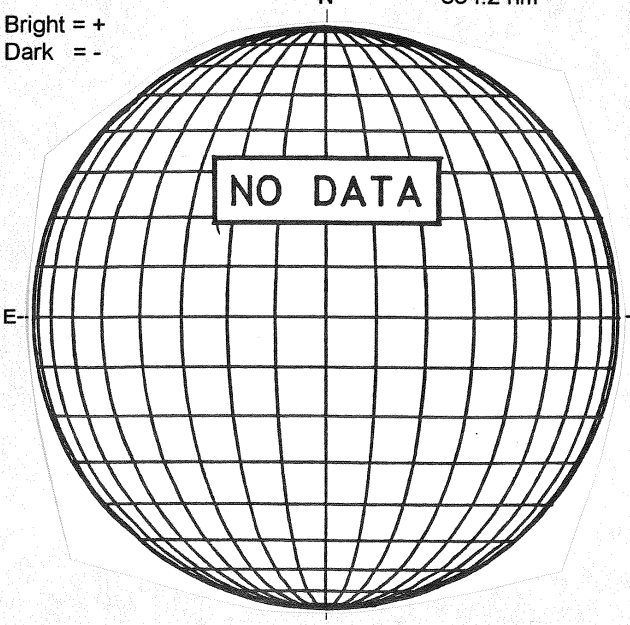

STANFORD MAGNETOGRAM

Solid = +
Dashed = -

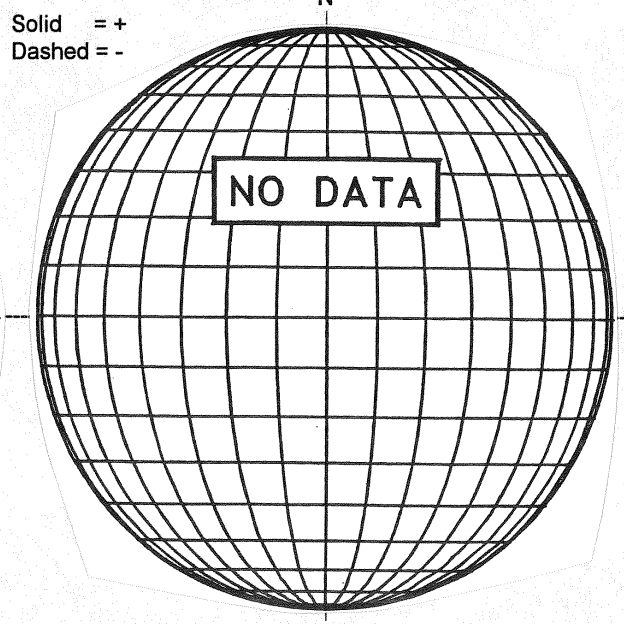

MT. WILSON MAGNETOGRAM

DeltaY = 20.1
DeltaX = 13.0

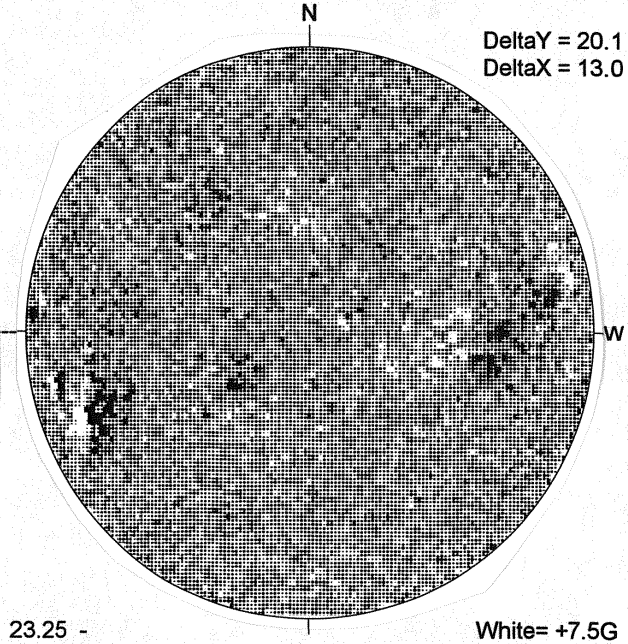

23.25 -
23.68 UT

White= +7.5G
Black = -7.5G

KANZELHOHE H-ALPHA

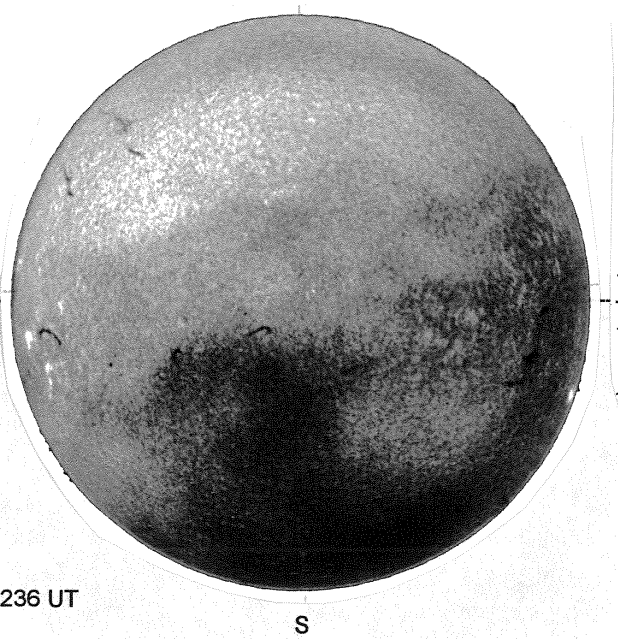

1236 UT

HOLLOMAN SUNSPOTS

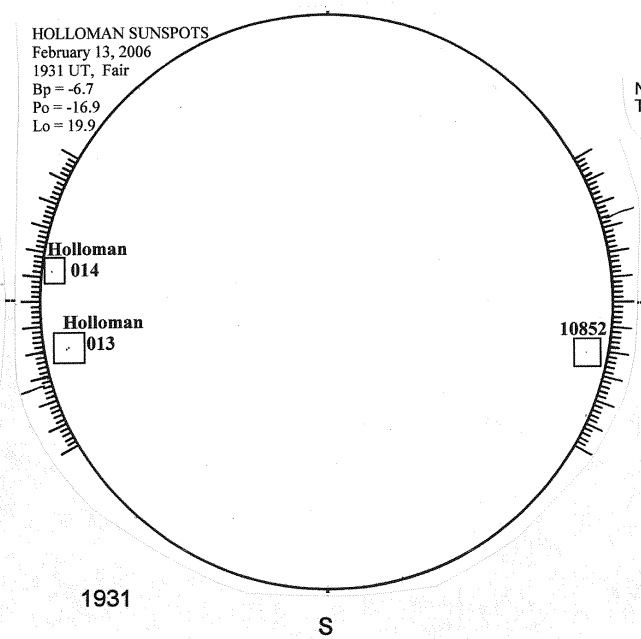

1931

SACRAMENTO PEAK CORONA (1.15 Radii)
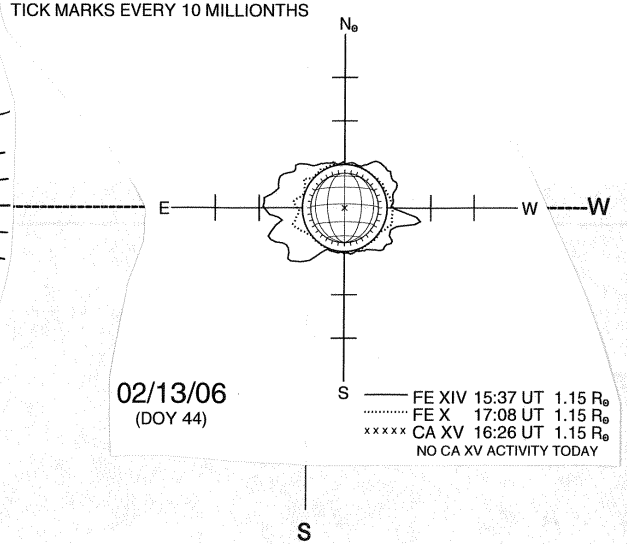
NSO / SACRAMENTO PEAK CORONAL DATA
TICK MARKS EVERY 10 MILLIONTHS