FEBRUARY 7, 2006 (P= -14.48, Bo = -6.41, Lo = 109.09)

KITT PEAK MAGNETOGRAM--SOLIS

854.2 nm

Bright = +
Dark = -

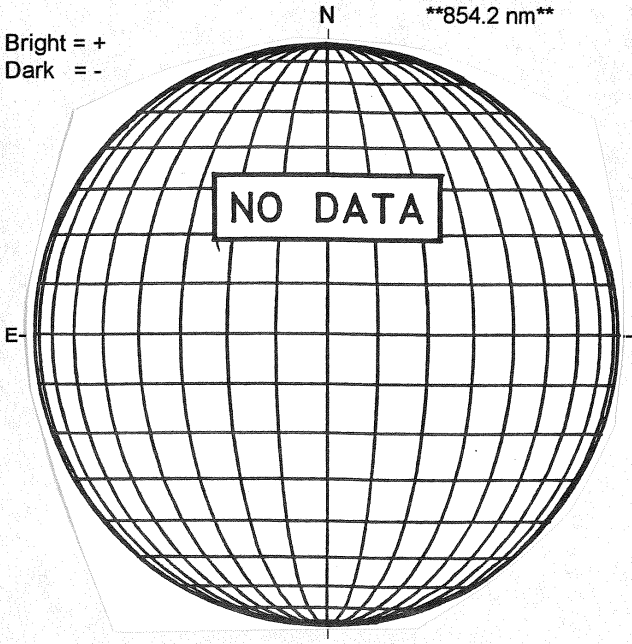

STANFORD MAGNETOGRAM

Solid = +
Dashed = -

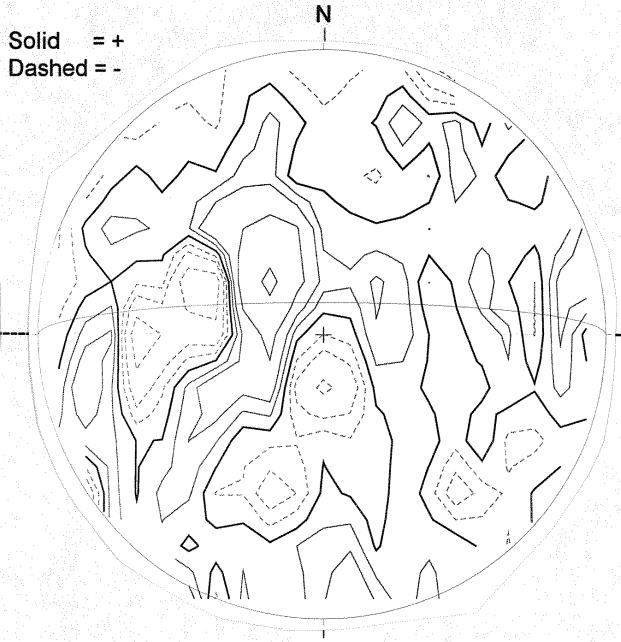

2114 UT

MT. WILSON MAGNETOGRAM

DeltaY =
DeltaX =

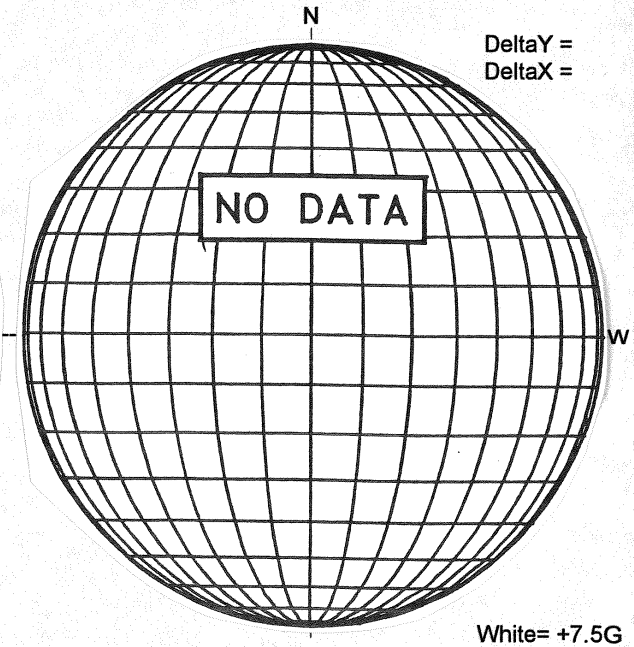

White= +7.5G
Black = -7.5G

KANZELHOHE H-ALPHA

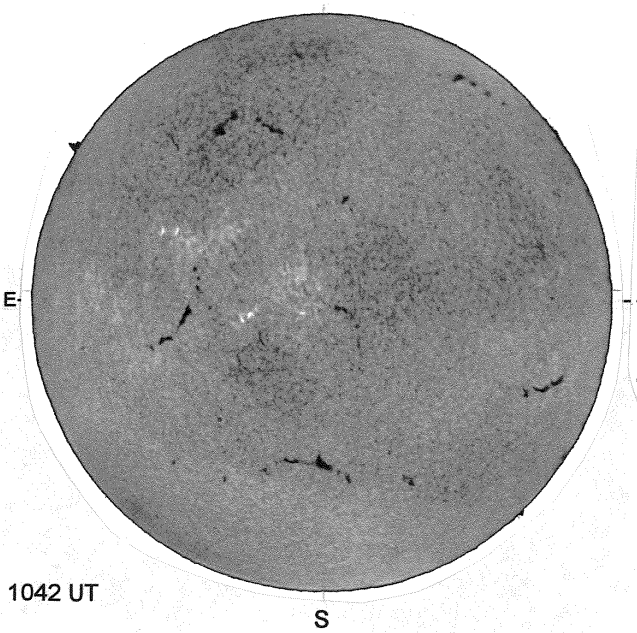

1042 UT

HOLLOMAN SUNSPOTS

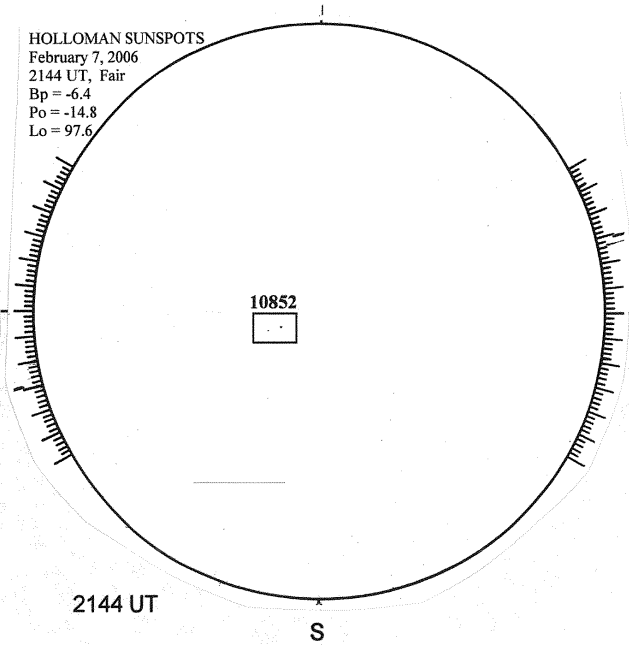

2144 UT
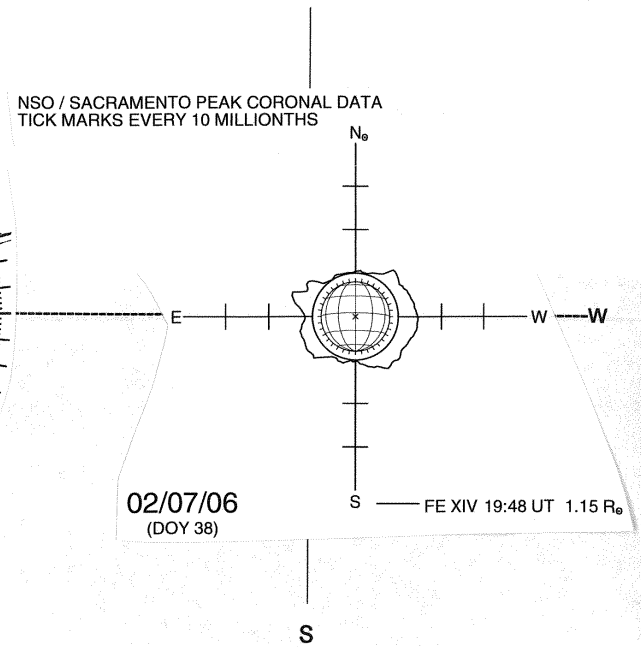
SACRAMENTO PEAK CORONA (1.15 Radii)