FEBRUARY 6, 2006 (P= -14.10, Bo = -6.35, Lo = 122.26)

KITT PEAK MAGNETOGRAM--SOLIS

854.2 nm

Bright = +
Dark = -

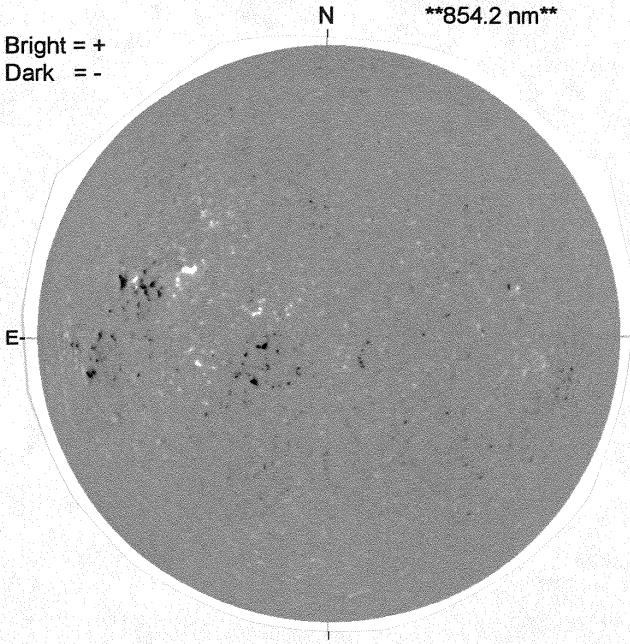

1726 UT

STANFORD MAGNETOGRAM

Solid = +
Dashed = -

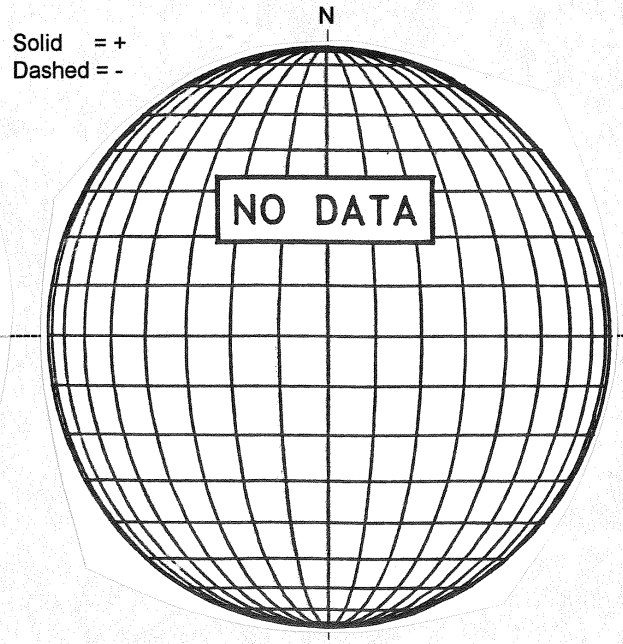

MT. WILSON MAGNETOGRAM

DeltaY =
DeltaX =

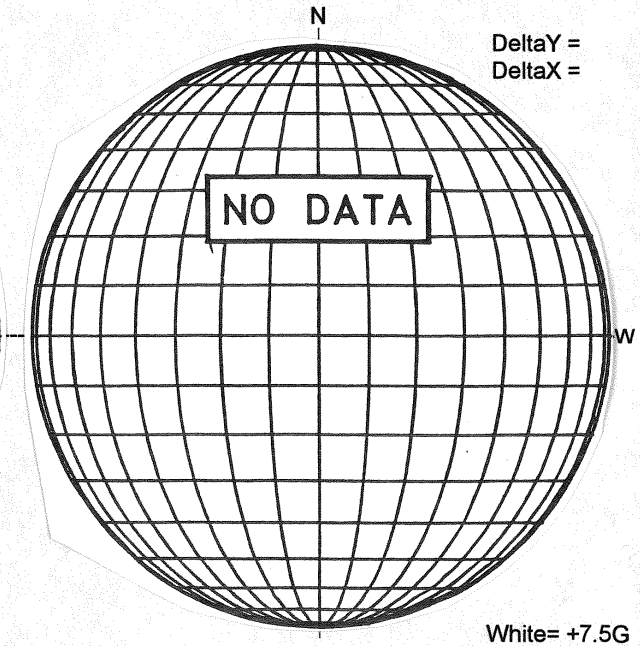

White= +7.5G
Black = -7.5G

KANZELHOHE H-ALPHA

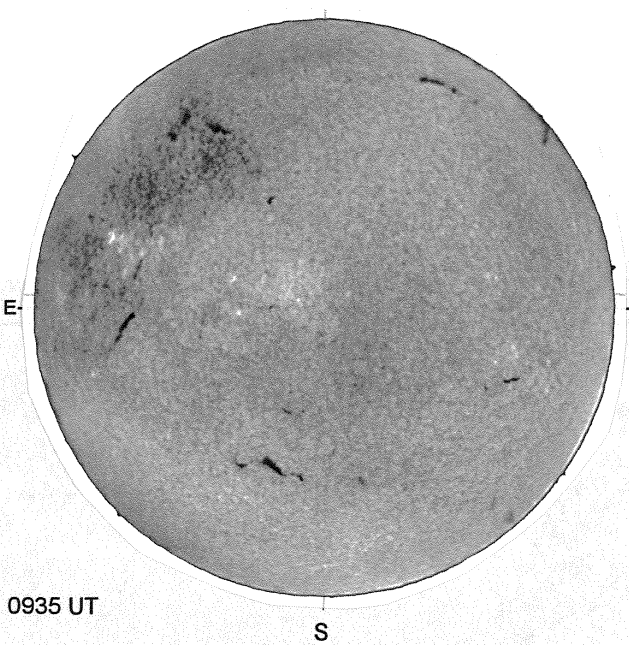

0935 UT

ISOON/OSPaN SUNSPOTS

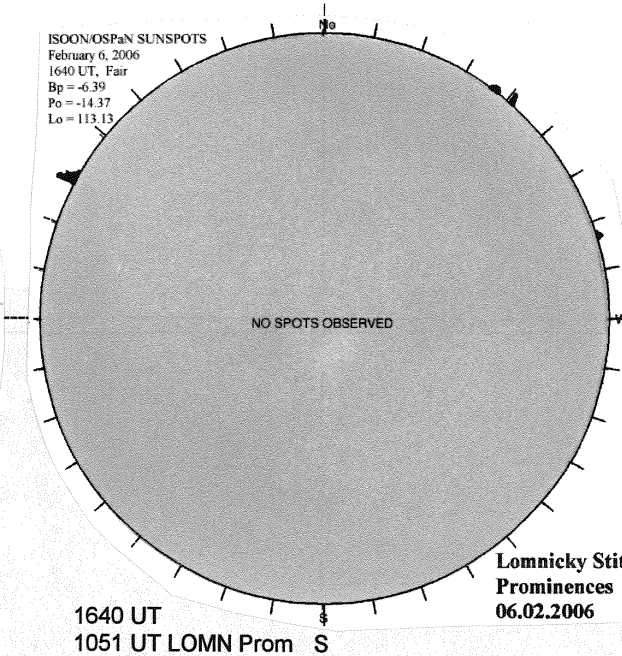

1640 UT
1051 UT LOMN Prom
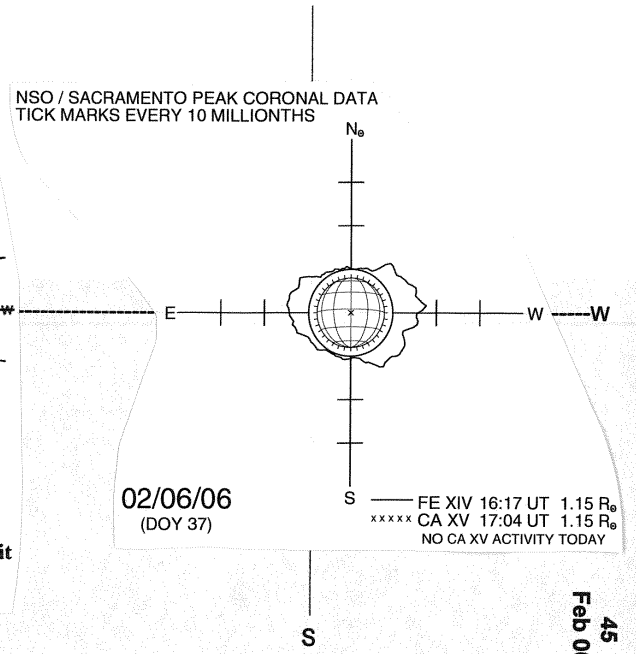
SACRAMENTO PEAK CORONA (1.15 Radii)