FEBRUARY 3, 2006 (P= -12.93, Bo = -6.16, Lo = 161.76)

KITT PEAK MAGNETOGRAM--SOLIS

854.2 nm

Bright = +
Dark = -

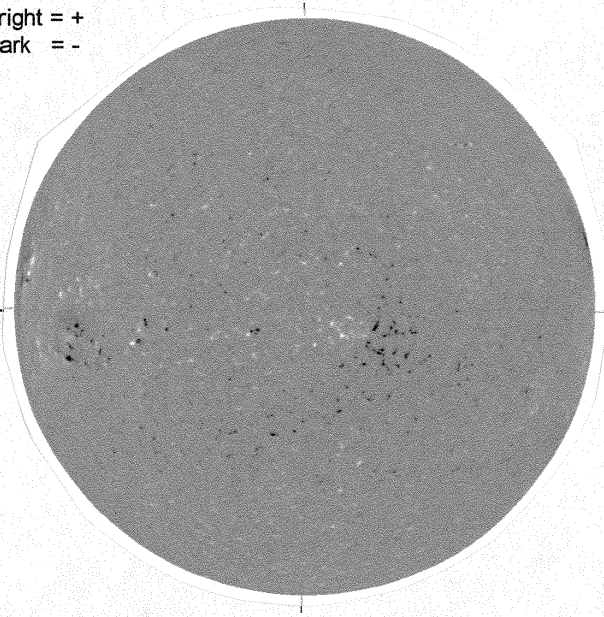

1658 UT

STANFORD MAGNETOGRAM

Solid = +
Dashed = -

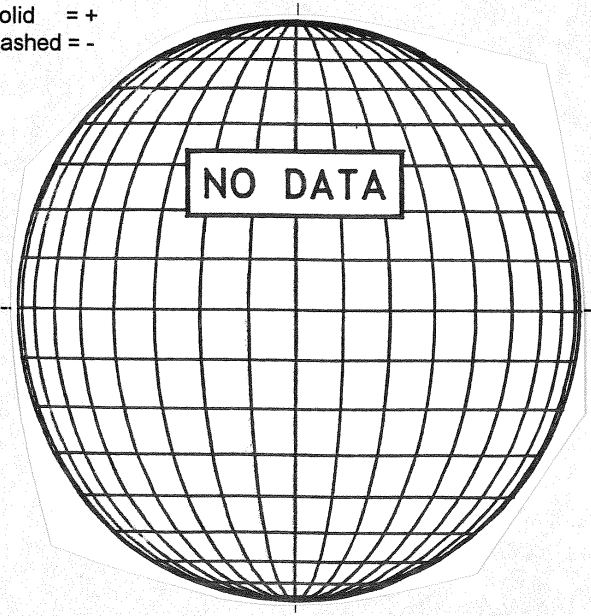

16.94 -
17.91 UT

MT. WILSON MAGNETOGRAM

DeltaY = 13.1
DeltaX = 9.6

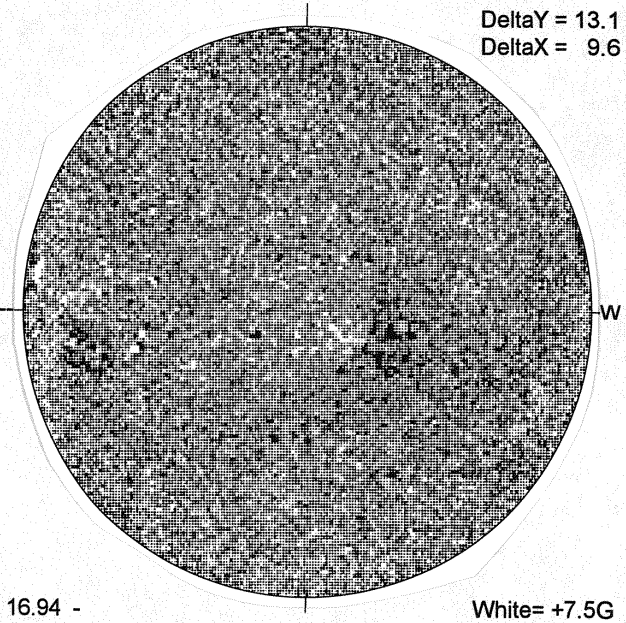

White= +7.5G
Black = -7.5G

KANZELHOHE H-ALPHA

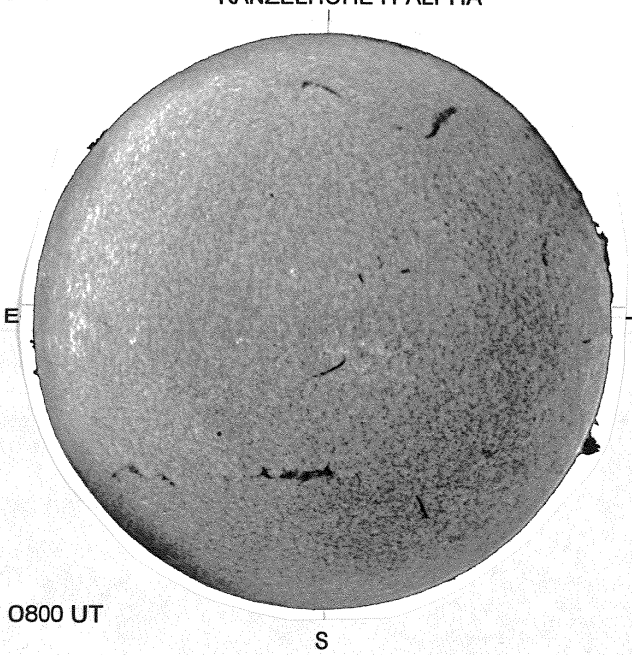

0800 UT

ISOON/OSPaN SUNSPOTS

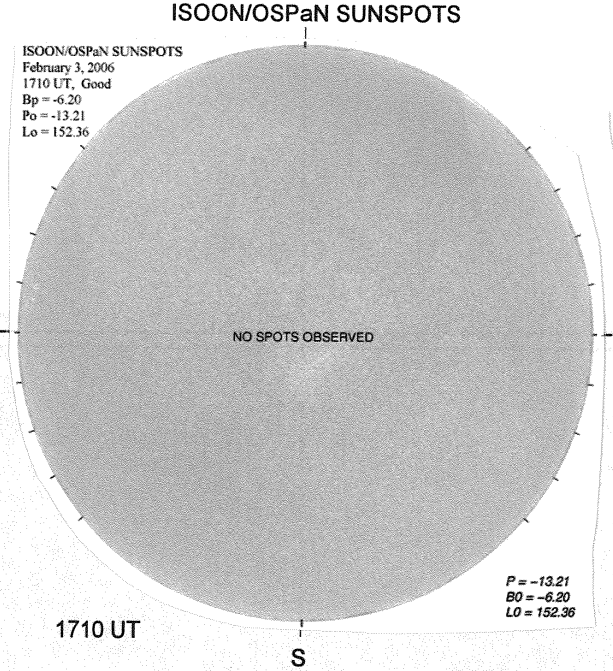

1710 UT
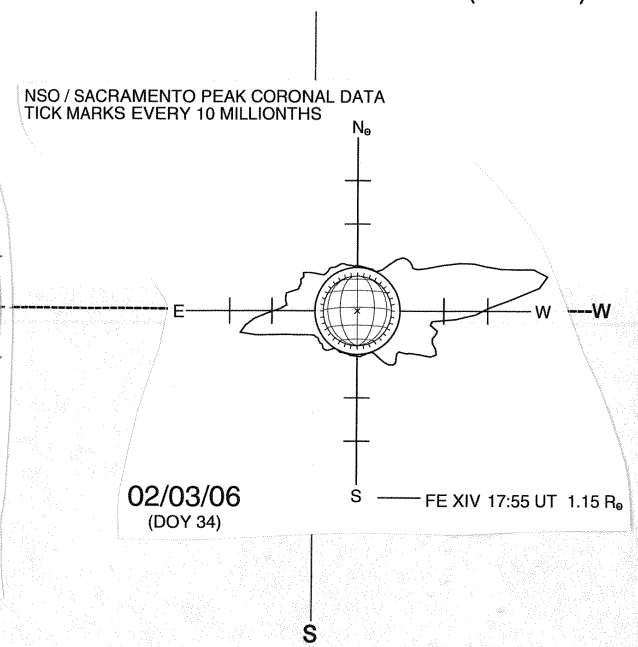
SACRAMENTO PEAK CORONA (1.15 Radii)