FEBRUARY 1, 2006 (P= -12.12, Bo = -6.02, Lo = 188.09)

KITT PEAK MAGNETOGRAM--SOLIS

854.2 nm

Bright = +
Dark = -

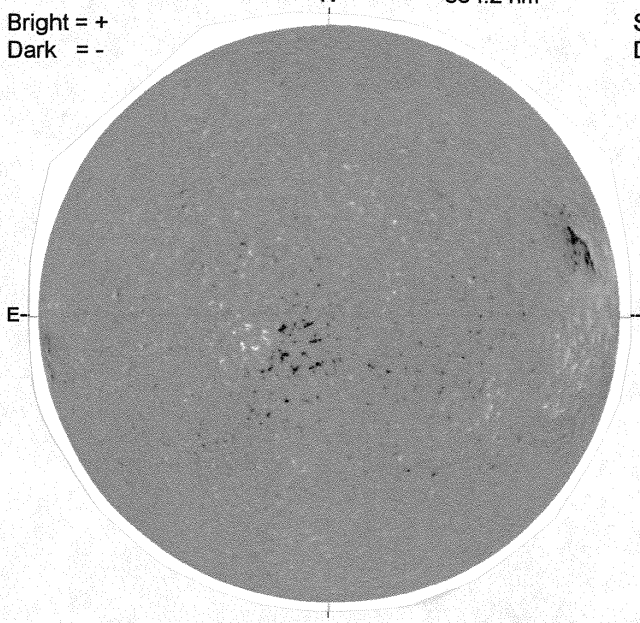

2135 UT

STANFORD MAGNETOGRAM

Solid = +
Dashed = -

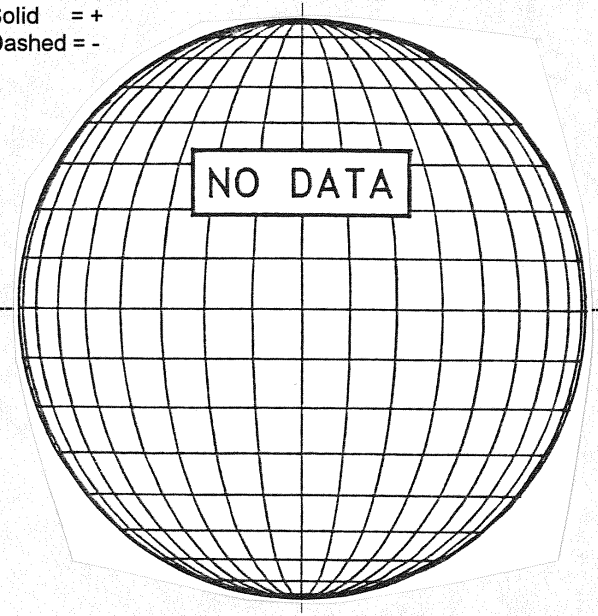

MT. WILSON MAGNETOGRAM

DeltaY = 20.1
DeltaX = 13.0

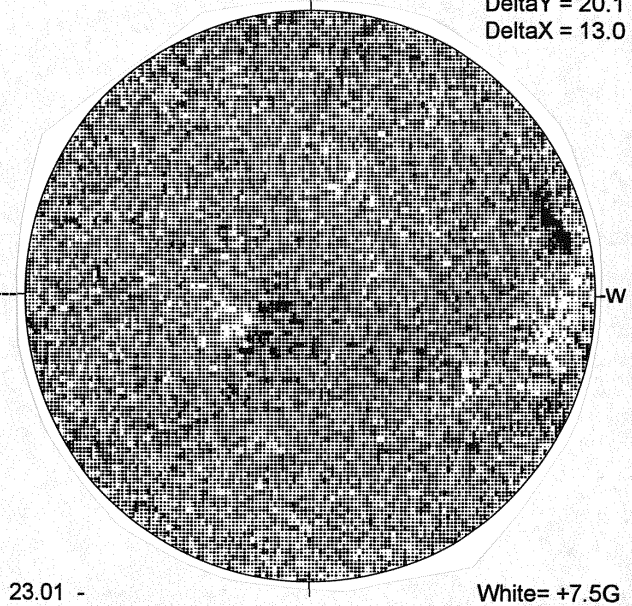

23.01 -
23.44 UT

White= +7.5G
Black = -7.5G

KANZELHOHE H-ALPHA

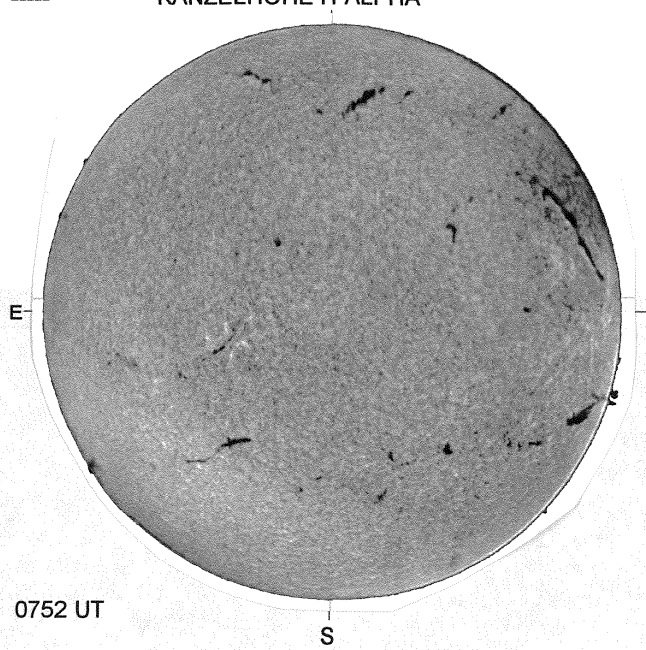

0752 UT

ISOON/OSPaN SUNSPOTS

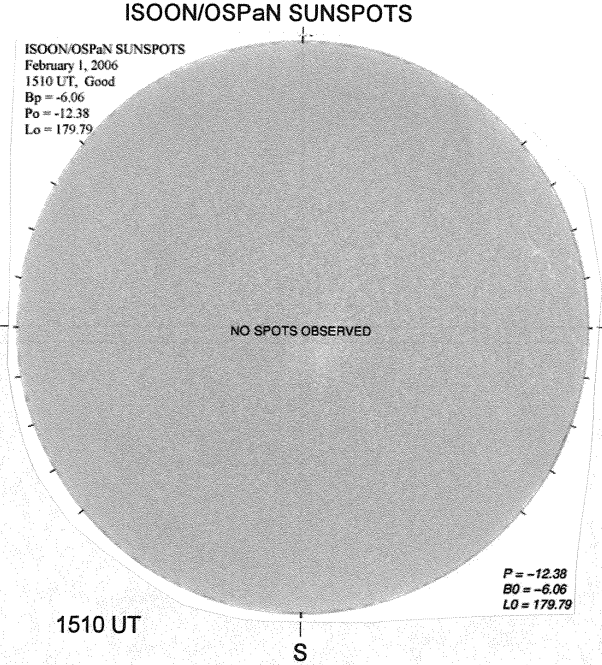

1510 UT

SACRAMENTO PEAK CORONA (1.15 Radii)

NSO / SACRAMENTO PEAK CORONAL DATA
TICK MARKS EVERY 10 MILLIONTHS

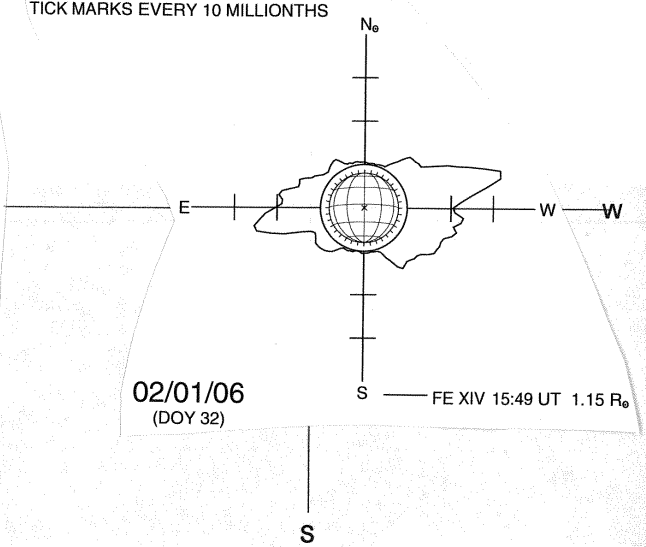

02/01/06
(DOY 32)

FE XIV 15:49 UT 1.15 $R_\odot$