JANUARY 30, 2006 (P= -11.29, Bo = -5.87, Lo = 214.42)

KITT PEAK MAGNETOGRAM—SOLIS

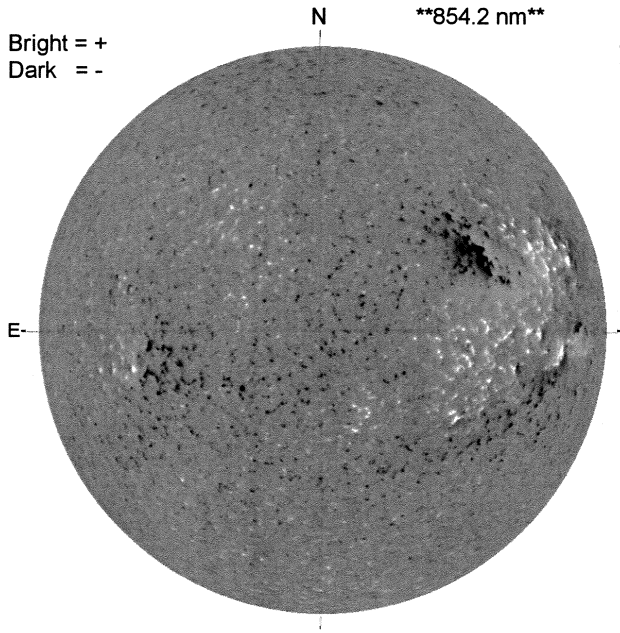

STANFORD MAGNETOGRAM

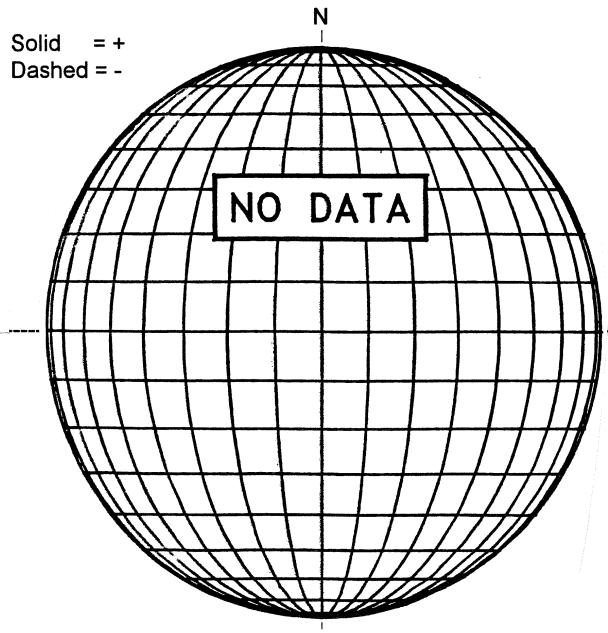

MT. WILSON MAGNETOGRAM

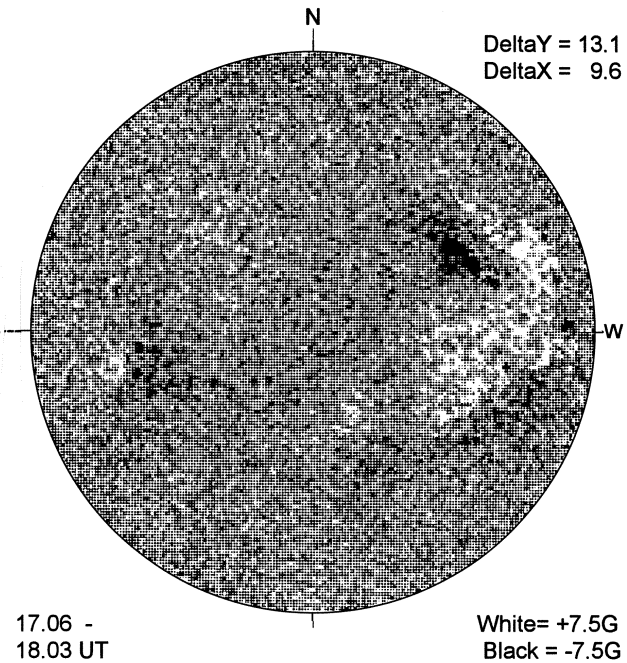

KANZELHOHE H-ALPHA

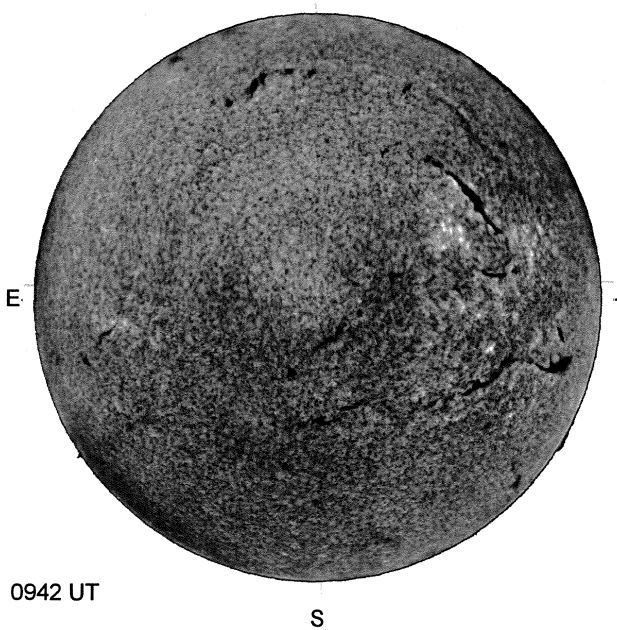

ISOON/OSPaN SUNSPOTS

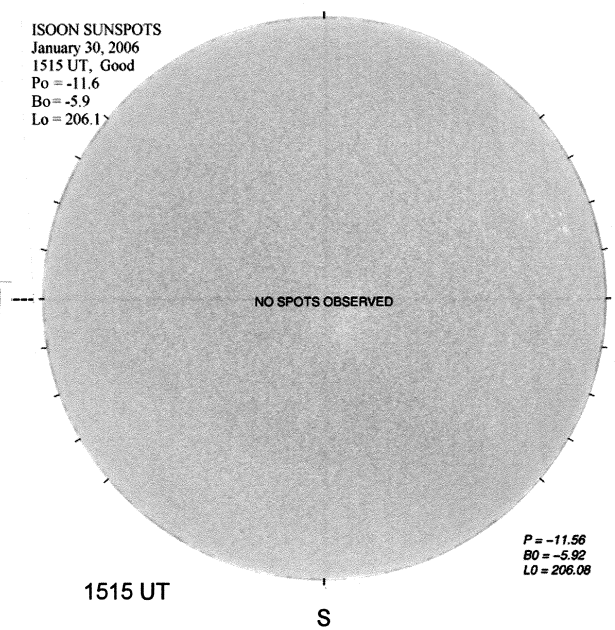
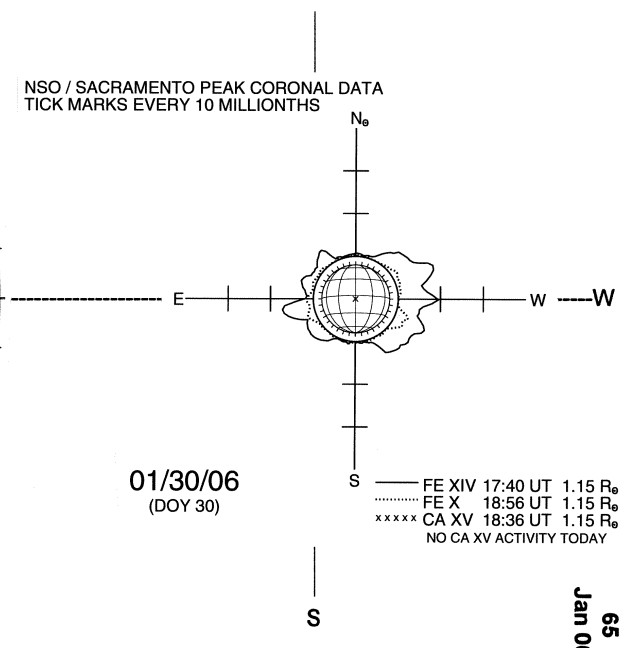
SACRAMENTO PEAK CORONA (1.15 Radii)