# JANUARY 17, 2005 ( P= -5.54, Bo = -4.74, Lo = 25.59)

## KITT PEAK MAGNETOGRAM--SOLIS

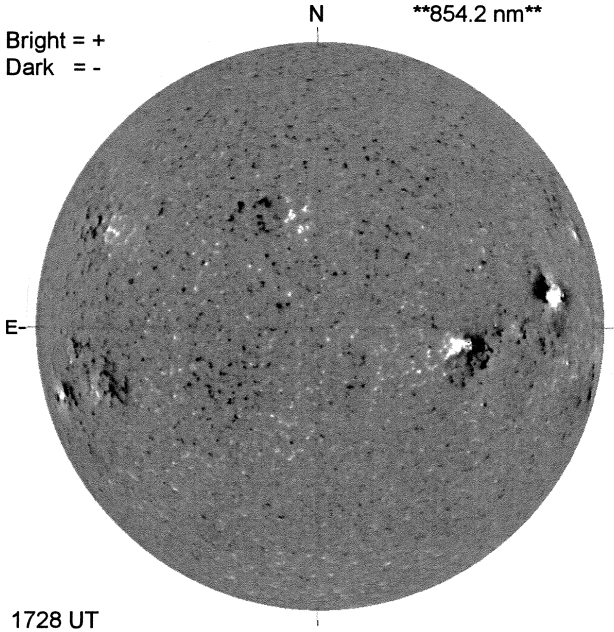


## STANFORD MAGNETOGRAM

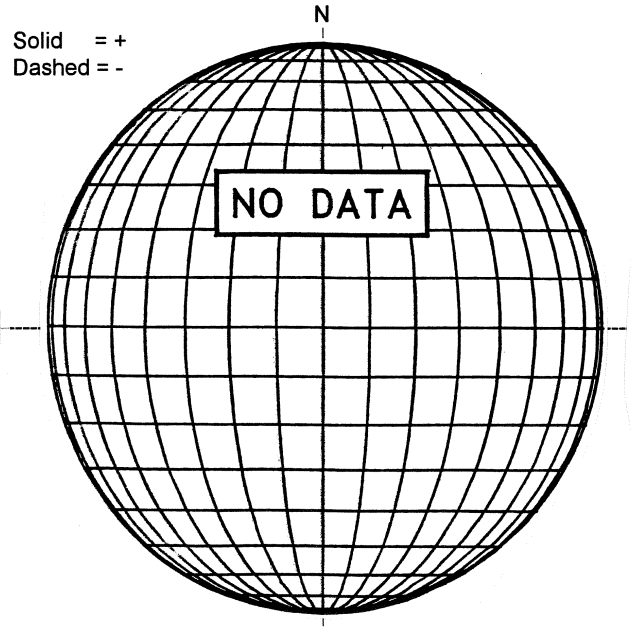


## MT. WILSON MAGNETOGRAM

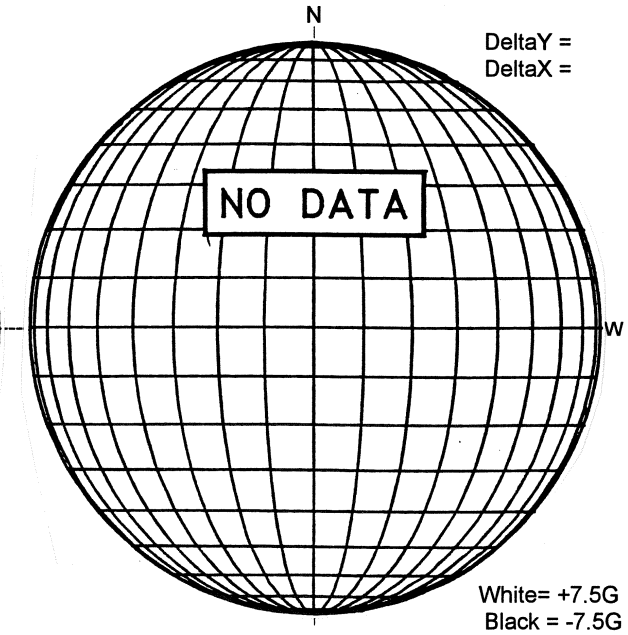


## KANZELHOHE H-ALPHA

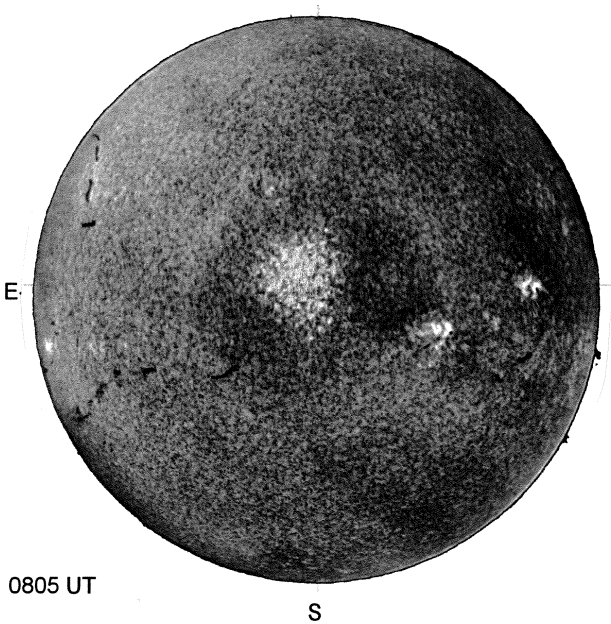


## HOLLOMAN SUNSPOTS

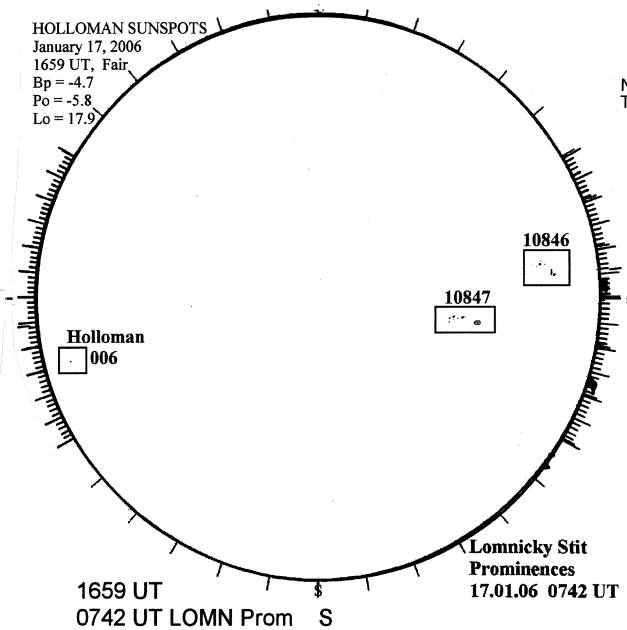

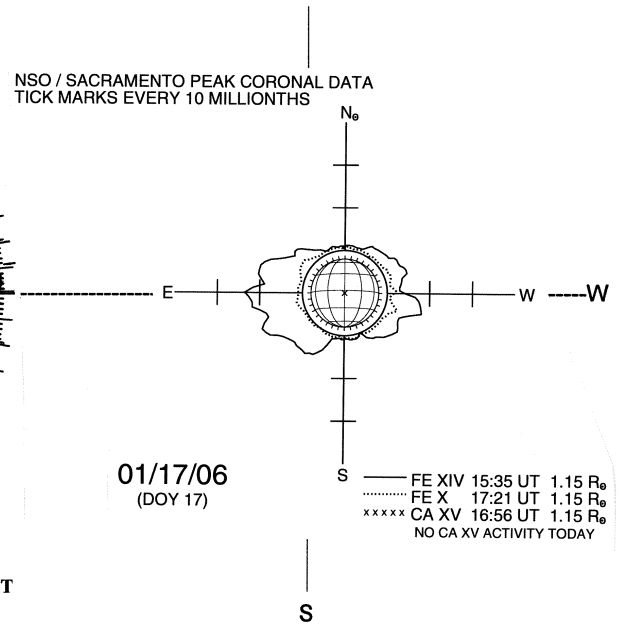
## SACRAMENTO PEAK CORONA (1.15 Radii)----