JANUARY 13, 2006 (P= -3.66, Bo = -4.34, Lo = 78.26)

KITT PEAK MAGNETOGRAM--SOLIS

N

854.2 nm

Bright = +
Dark = -

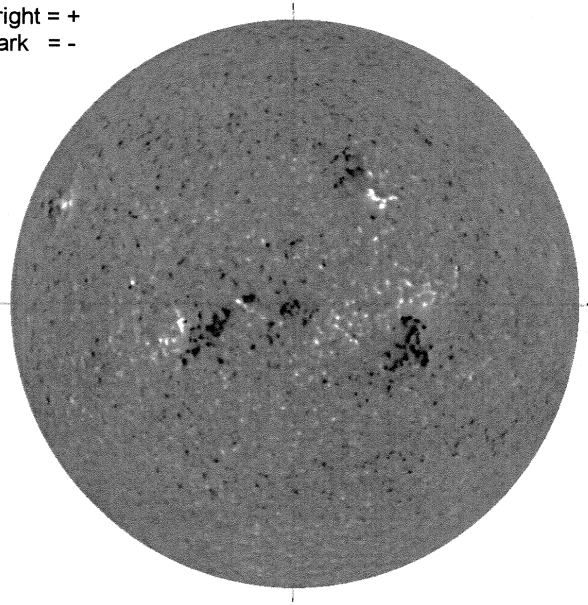

E-

1726 UT

STANFORD MAGNETOGRAM

N

Solid = +
Dashed = -

1752 UT

MT. WILSON MAGNETOGRAM

N

DeltaY = 13.1
DeltaX = 9.6

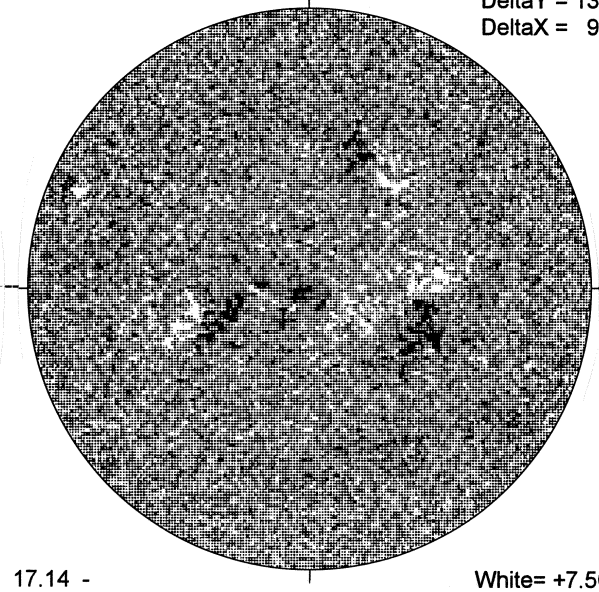

-W

17.14 -
18.11 UT

White= +7.5G
Black = -7.5G

KANZELHOHE H-ALPHA

E-

0759 UT

S

SAN VITO SUNSPOTS

LEARMONTH SUNSPOTS
January 13, 2006
0124 UT, Poor
Bp = -4.3
Po = -3.6
Lo = 77.7

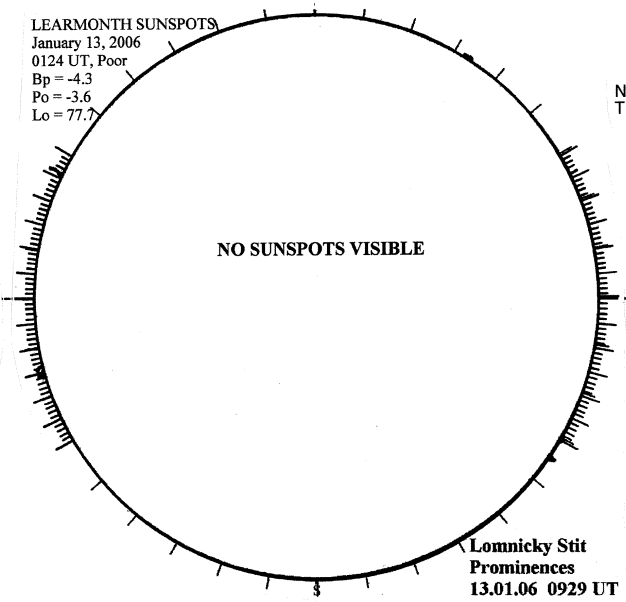

NO SUNSPOTS VISIBLE

Lomnicky Stit
Prominences
13.01.06 0929 UT

0929 UT LOMN Prom S

SACRAMENTO PEAK CORONA (1.15 Radii)----

NSO / SACRAMENTO PEAK CORONAL DATA
TICK MARKS EVERY 10 MILLIONTHS

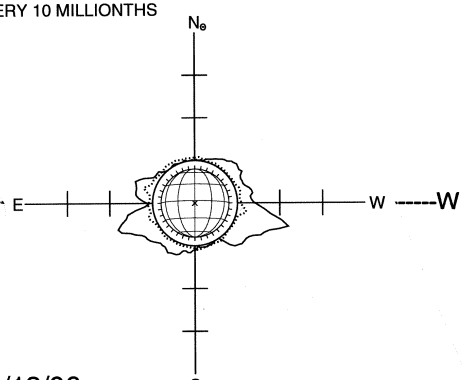

01/13/06
(DOY 13)

FE XIV 15:27 UT 1.15 $R_\odot$
FE X 17:01 UT 1.15 $R_\odot$
CA XV 16:03 UT 1.15 $R_\odot$
NO CA XV ACTIVITY TODAY

S