JANUARY 12, 2006 (P= -3.19, Bo = -4.23, Lo = 91.43)

KITT PEAK MAGNETOGRAM--SOLIS

N **854.2 nm**

Bright = +
Dark = -

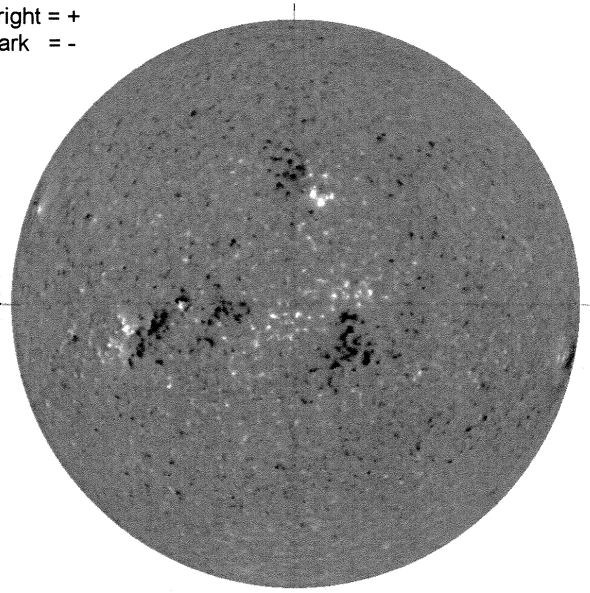

E-

1723 UT

STANFORD MAGNETOGRAM

N

Solid = +
Dashed = -

2135 UT

MT. WILSON MAGNETOGRAM

N

DeltaY = 13.1
DeltaX = 9.6

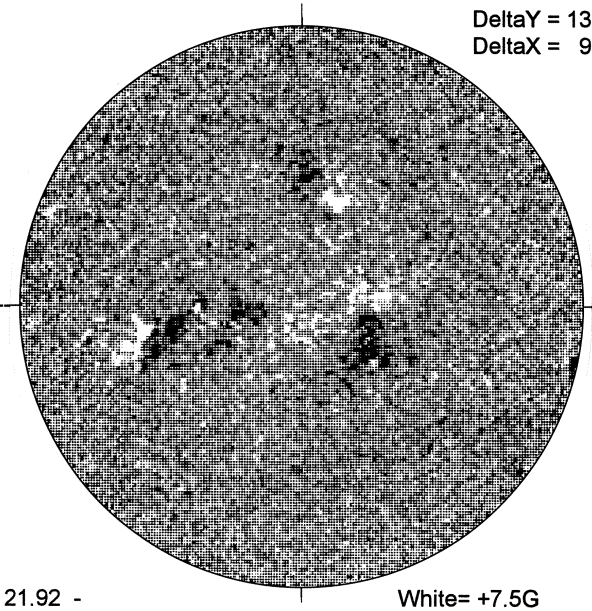

-W

21.92 -
22.90 UT

White= +7.5G
Black = -7.5G

---- KANZELHOHE H-ALPHA

E-

0756 UT

S

SAN VITO SUNSPOTS

LEARMONTH SUNSPOTS
January 12, 2006
0045 UT, Poor
Bp = -4.2
Po = -3.1
Lo = 91.2

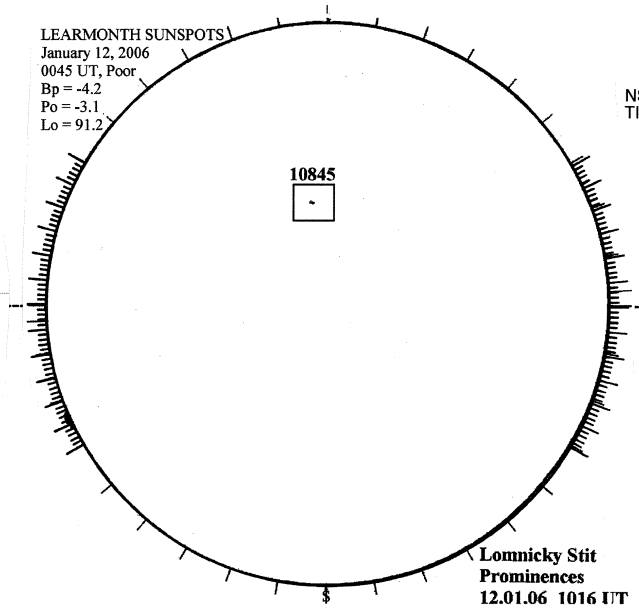

Lomnicky Stit
Prominences
12.01.06 1016 UT

1016 UT LOMN Prom S

SACRAMENTO PEAK CORONA (1.15 Radii)----

NSO / SACRAMENTO PEAK CORONAL DATA
TICK MARKS EVERY 10 MILLIONTHS

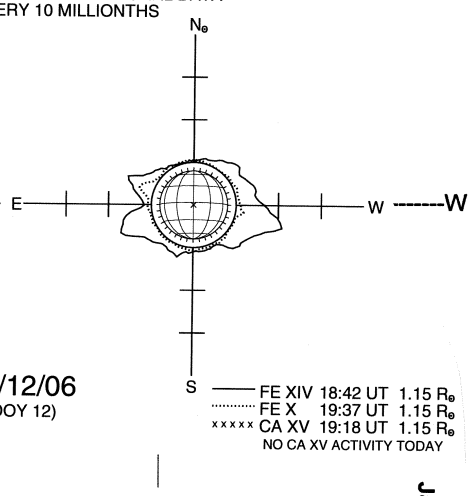

01/12/06
(DOY 12)

FE XIV 18:42 UT 1.15 R☉
FE X 19:37 UT 1.15 R☉
xxxxx CA XV 19:18 UT 1.15 R☉
NO CA XV ACTIVITY TODAY

S

47
Jan 06