JANUARY 5, 2006 (P= 0.17, Bo = -3.47, Lo = 183.61)

KITT PEAK MAGNETOGRAM--SOLIS

854.2 nm

Bright = +
Dark = -

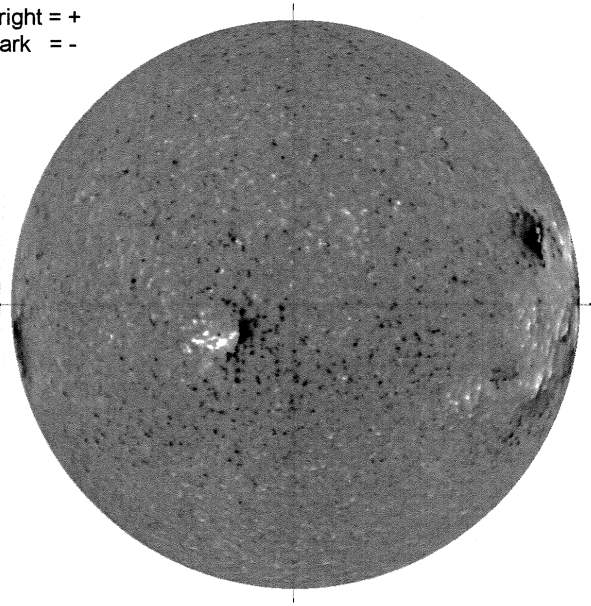

1650 UT

STANFORD MAGNETOGRAM

Solid = +
Dashed = -

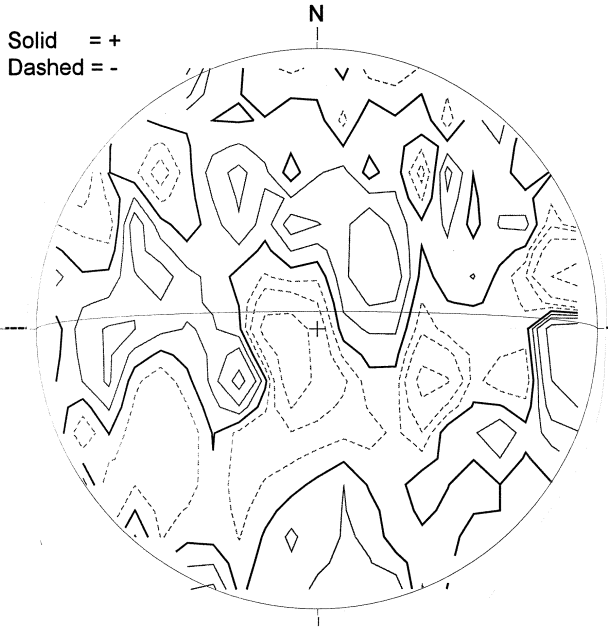

2128 UT

MT. WILSON MAGNETOGRAM

DeltaY = 13.1
DeltaX = 9.6

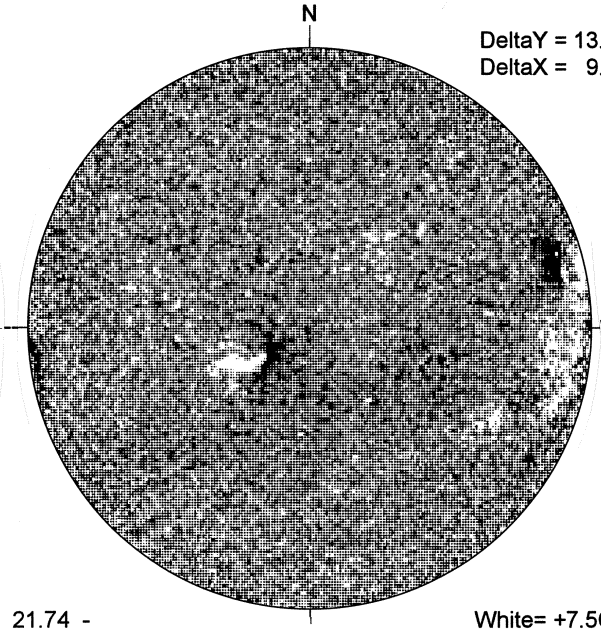

21.74 -
22.71 UT

White= +7.5G
Black = -7.5G

KANZELHOHE H-ALPHA

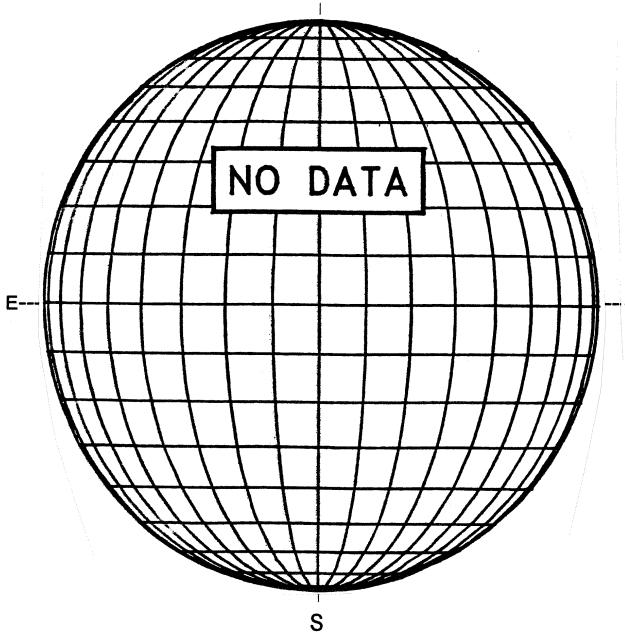

HOLLOMAN SUNSPOTS

HOLLOMAN SUNSPOTS
January 5, 2006
1809 UT, Poor
Bp = -3.5
Po = -0.1
Lo = 176.0

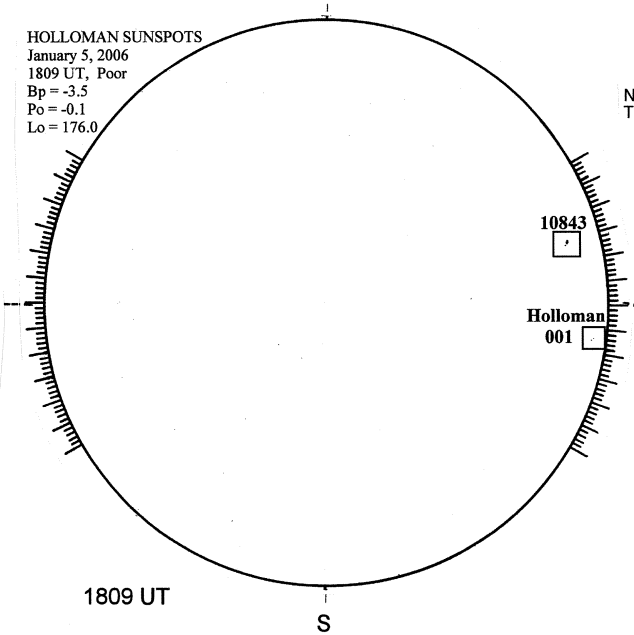

1809 UT

SACRAMENTO PEAK CORONA (1.15 Radii)----

NSO / SACRAMENTO PEAK CORONAL DATA
TICK MARKS EVERY 10 MILLIONTHS

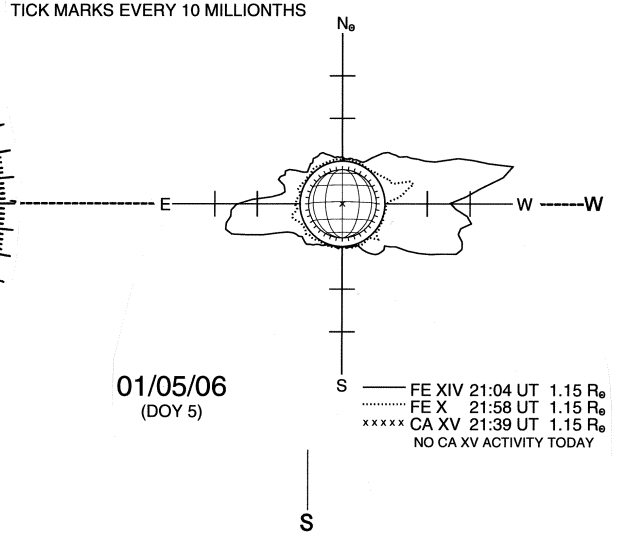

01/05/06
(DOY 5)

FE XIV 21:04 UT 1.15 $R_\odot$
FE X 21:58 UT 1.15 $R_\odot$
CA XV 21:39 UT 1.15 $R_\odot$
NO CA XV ACTIVITY TODAY