DECEMBER 29, 2005 (P= 3.57, Bo = -2.65, Lo = 275.80)

KITT PEAK MAGNETOGRAM--SOLIS

Bright = +
Dark = -

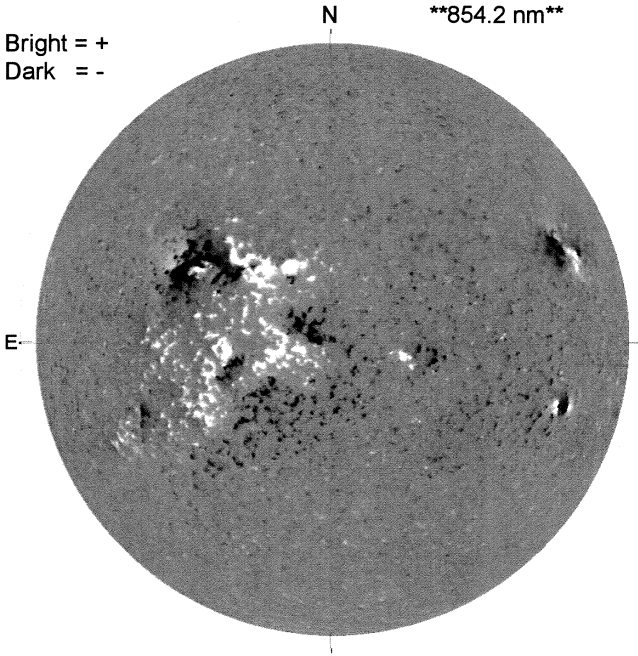

1737 UT

STANFORD MAGNETOGRAM

Solid = +
Dashed = -

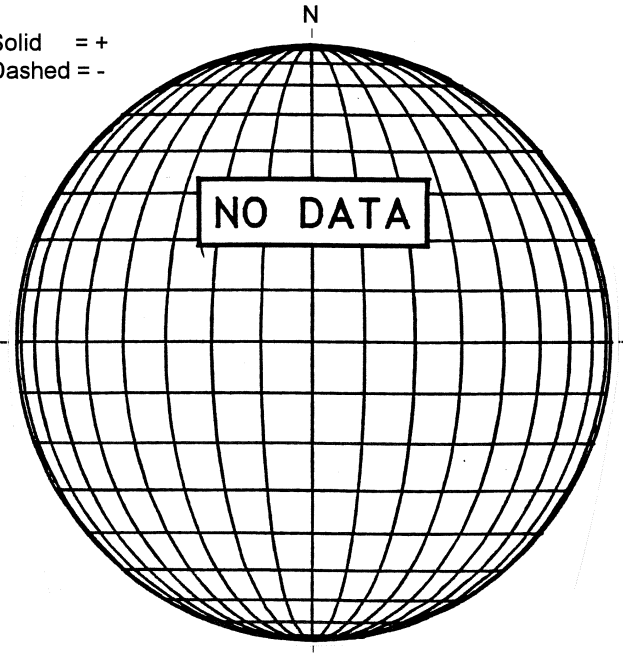

18.79 -
19.78 UT

MT. WILSON MAGNETOGRAM

DeltaY = 13.1
DeltaX = 9.6

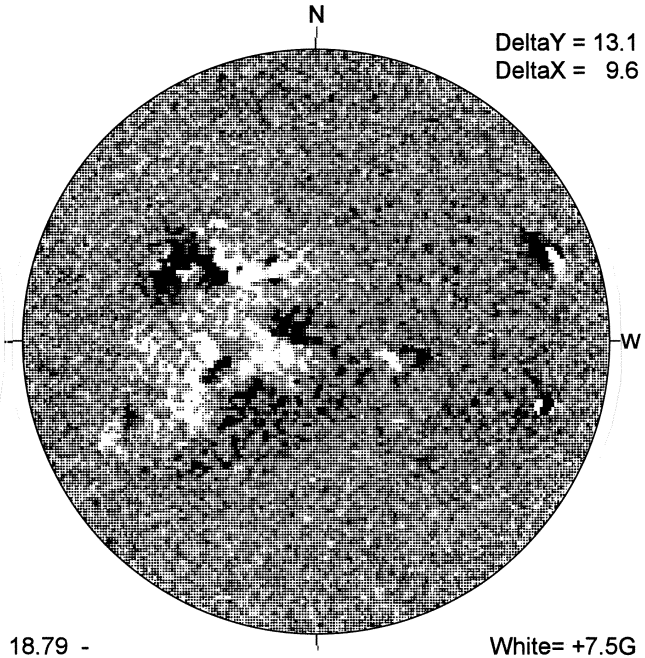

White= +7.5G
Black = -7.5G

MEUDON H-ALPHA

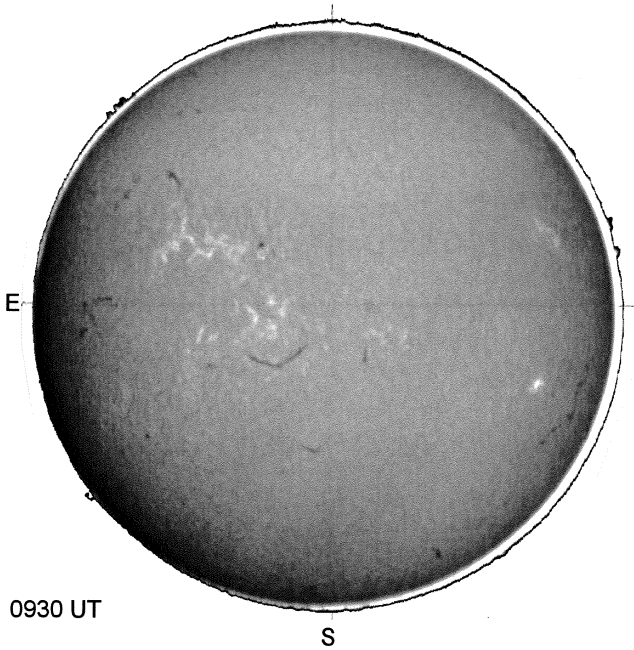

0930 UT

HOLLOMAN SUNSPOTS

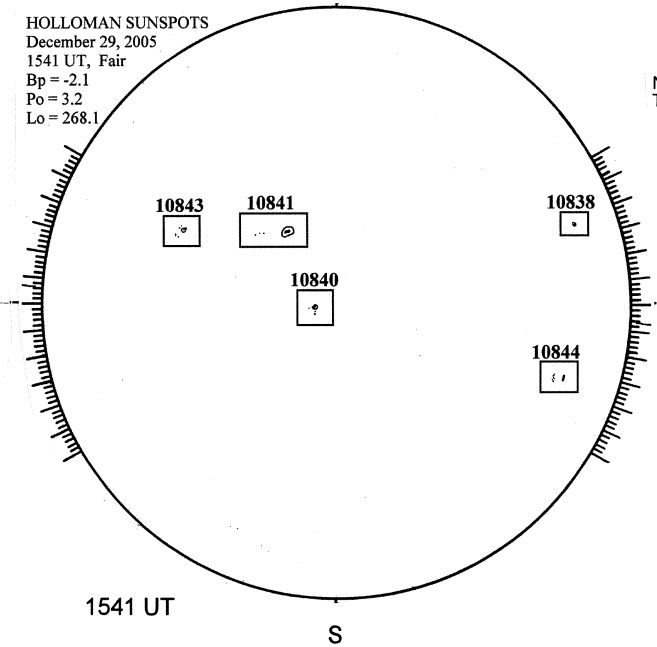

1541 UT

SACRAMENTO PEAK CORONA (1.15 Radii)

NSO / SACRAMENTO PEAK CORONAL DATA
TICK MARKS EVERY 10 MILLIONTHS

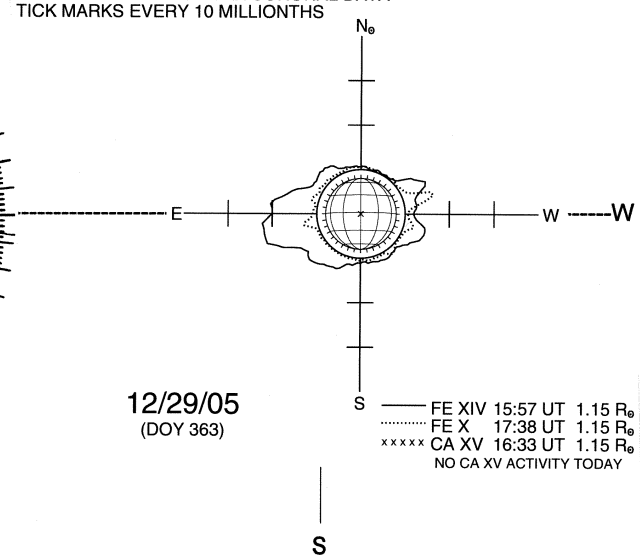

12/29/05
(DOY 363)

FE XIV 15:57 UT 1.15 R⊙
FE X 17:38 UT 1.15 R⊙
CA XV 16:33 UT 1.15 R⊙
NO CA XV ACTIVITY TODAY