DECEMBER 27, 2005 (P= 4.53, Bo = -2.41, Lo = 302.15)

KITT PEAK MAGNETOGRAM--SOLIS

N **854.2 nm**

Bright = +
Dark = -

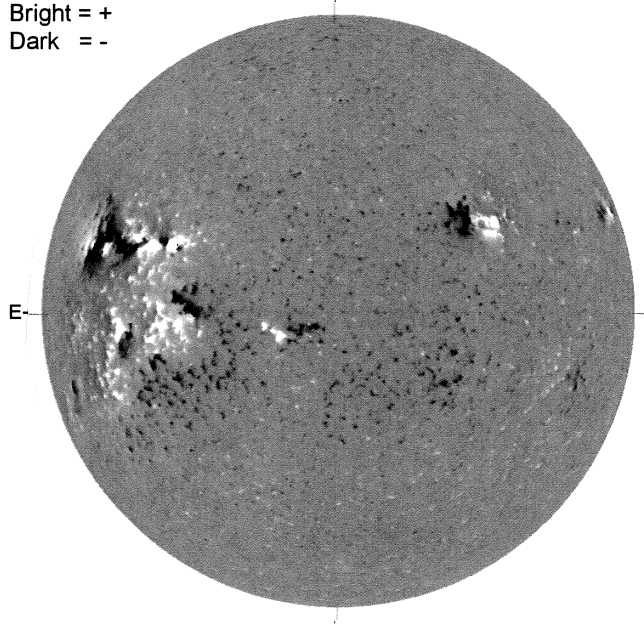

1807 UT

STANFORD MAGNETOGRAM

N

Solid = +
Dashed = -

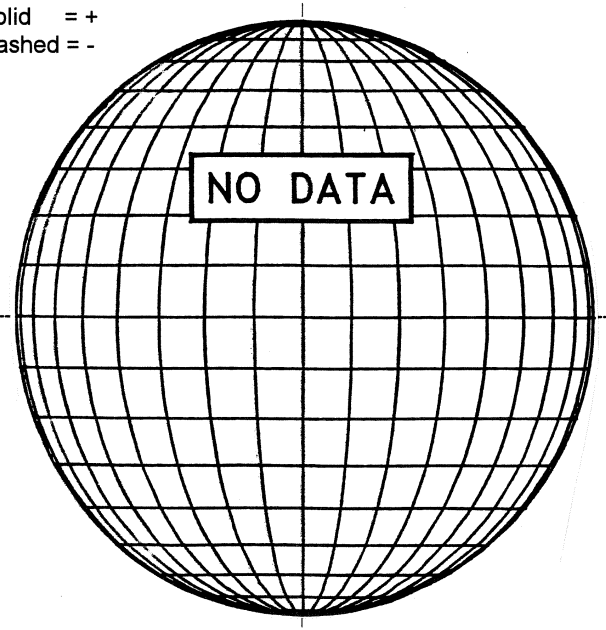

MT. WILSON MAGNETOGRAM

N

DeltaY =
DeltaX =

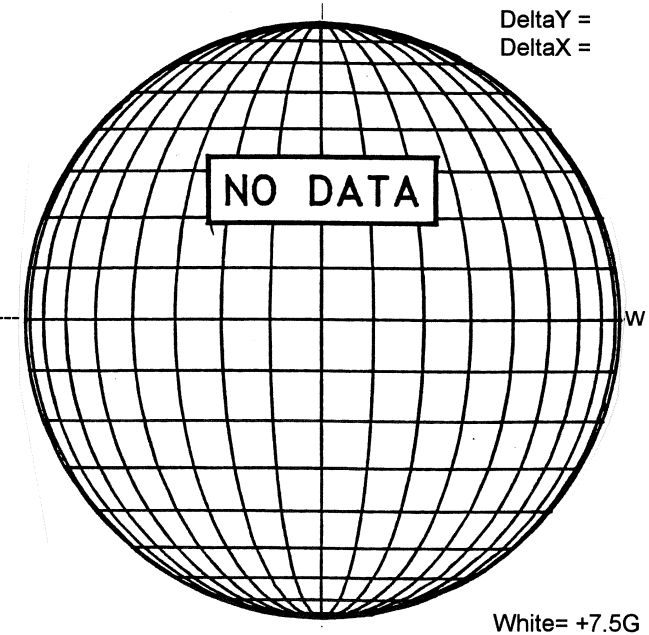

White= +7.5G
Black = -7.5G

MEUDON H-ALPHA

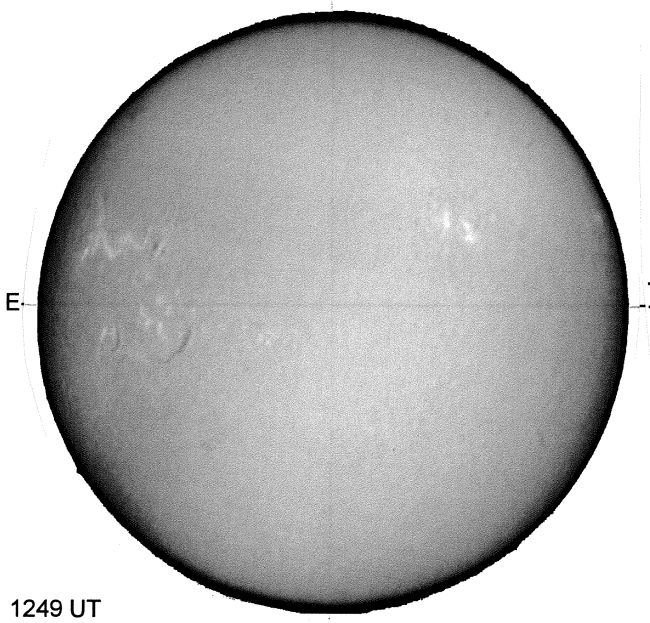

1249 UT

S

HOLLOMAN SUNSPOTS

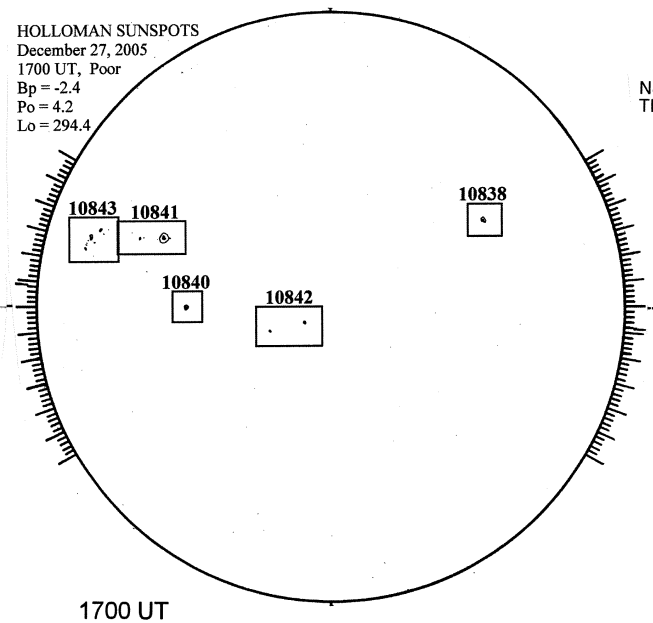

1700 UT

S

SACRAMENTO PEAK CORONA (1.15 Radii)

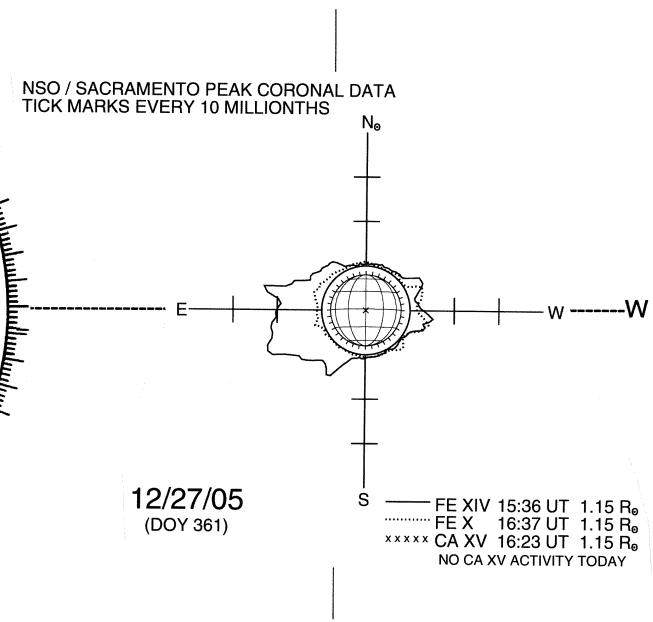

S