DECEMBER 22, 2005 (P= 6.92, Bo = -1.80, Lo = 8.01)

KITT PEAK MAGNETOGRAM--SOLIS

N **854.2 nm**

Bright = +
Dark = -

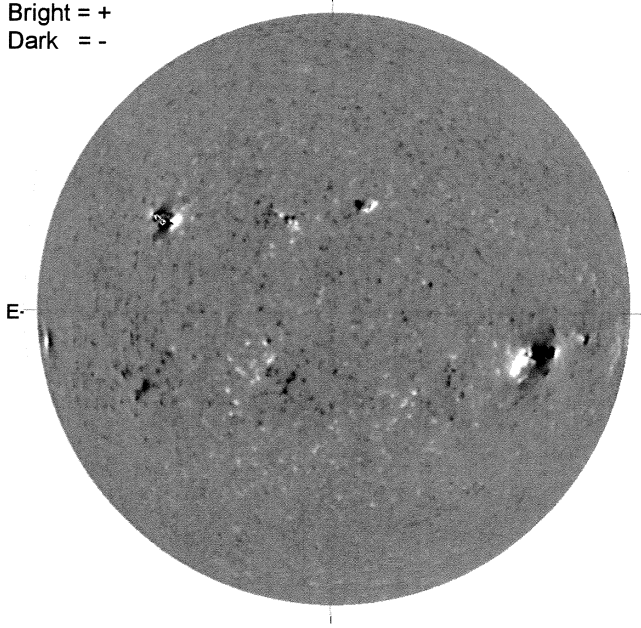

E

1843 UT

STANFORD MAGNETOGRAM

N

Solid = +
Dashed = -

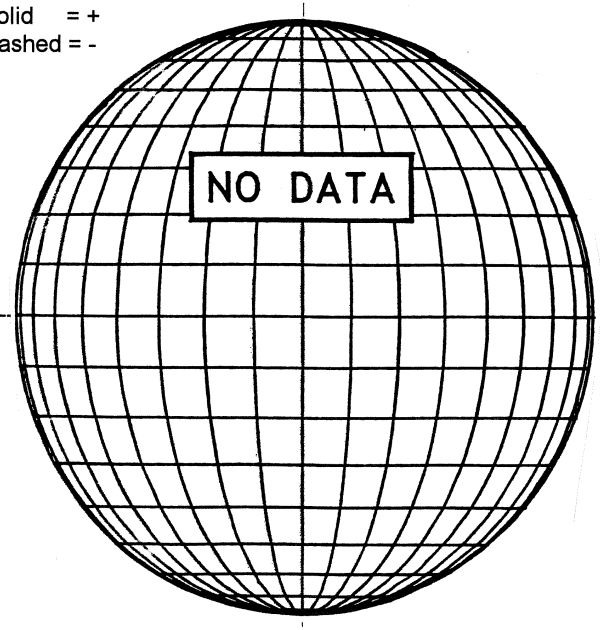

MT. WILSON MAGNETOGRAM

N

DeltaY =
DeltaX =

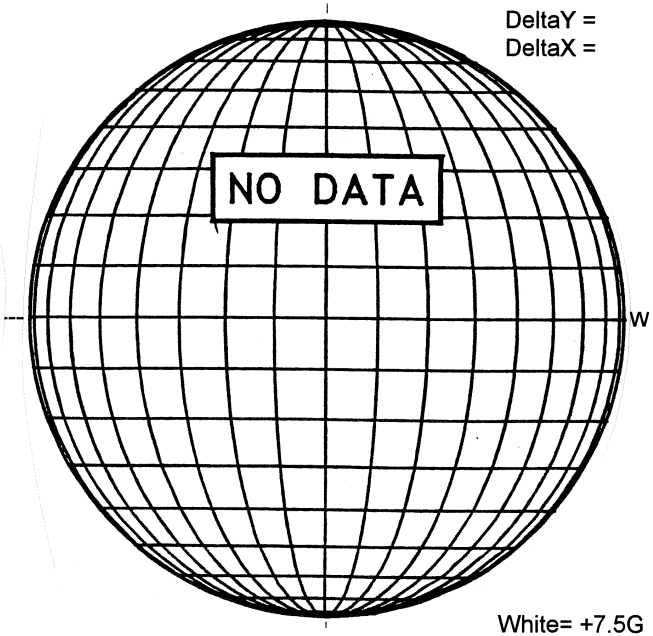

W

White= +7.5G
Black = -7.5G

KANZELHOHE H-ALPHA

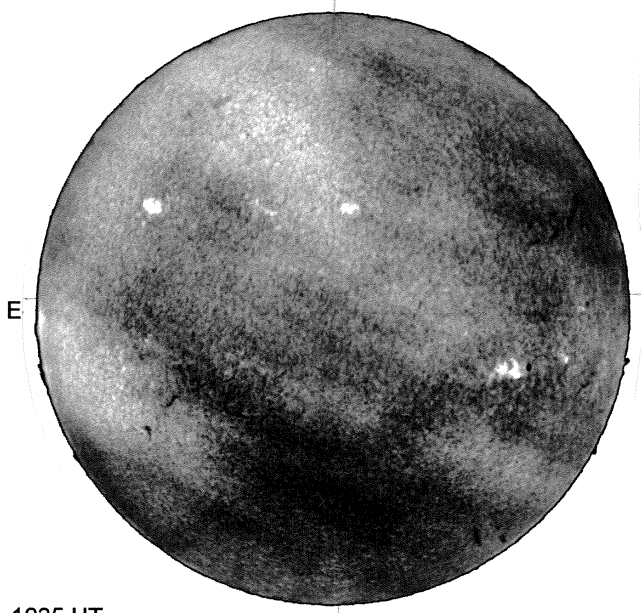

E

1035 UT

S

HOLLOMAN SUNSPOTS

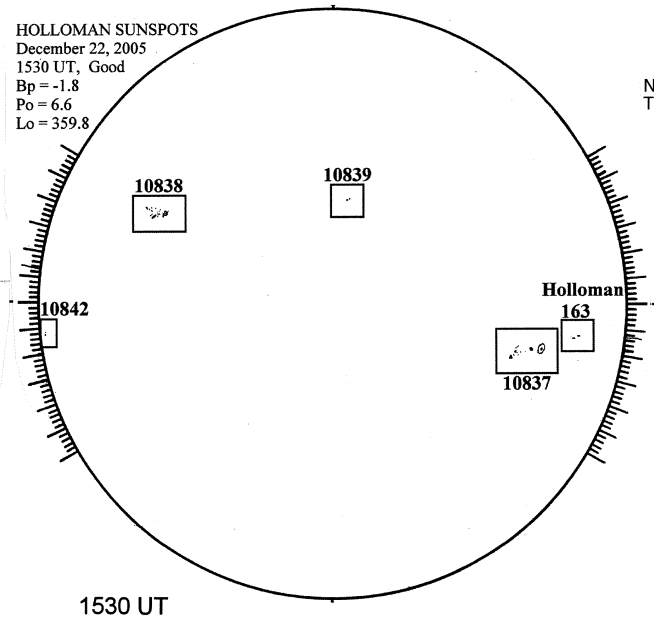

1530 UT

S

SACRAMENTO PEAK CORONA (1.15 Radii)----

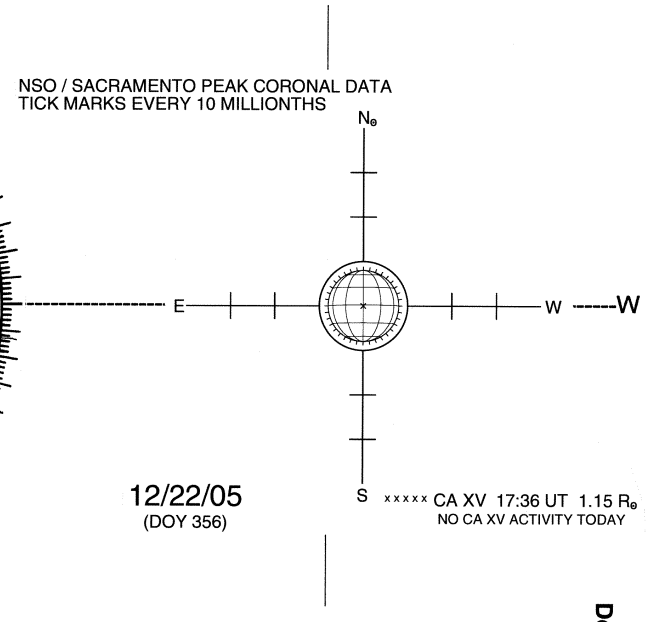

12/22/05
(DOY 356)

S

69
Dec 05